THE CITY OF MANSFIELD

STANDARD CONSTRUCTION DETAILS

MANSFIELD
TEXAS

ENGINEERING DEPT.

NOVEMBER 2014

THE STANDARD SPECIFICATIONS FOR CONSTRUCTION SHALL BE THE OCTOBER 2004 EDITION OF THE "STANDARD SPECIFICATIONS FOR PUBLIC WORKS CONSTRUCTION" PREPARED BY THE NORTH CENTRAL TEXAS COUNCIL OF GOVERNMENTS EXCEPT AS AMENDED BY THESE STANDARD DETAILS & C.O.M. MATERIAL TESTING POLICIES.

SHEET INDEX

SHEET No.	DESCRIPTION
P-1	PAVING - TYPICAL STREET SECTIONS: ARTERIALS
P-2	PAVING - MEDIAN, LEFT TURN LANE, & CONDUIT DETAILS
P-3	PAVING - TYPICAL STREET SECTIONS: RESIDENTIAL & COLLECTORS
P-4	PAVING - DRIVE APPROACHES, CURB, & ASPHALT DETAILS
P-5	PAVING - JOINT & SEALANT DETAILS
P-6	PAVING - SIDEWALK & RAMP DETAILS
P-7	PAVING - BARRICADE & SUBDRAIN DETAILS
P-8	PAVING - STRIPING, PAVEMENT MARKERS, SIGNS
SD-1	STORM DRAIN - CURB INLET DETAILS
SD-2	STORM DRAIN - MANHOLE AND DROP INLET DETAILS
SD-3	STORM DRAIN - TRENCH, COLLAR & MISCELLANEOUS DETAILS
SD-4	STORM DRAIN - CULVERT RAIL DETAILS
SD-5	STORM DRAIN - TYPE "A" AND "B" HEADWALLS
SD-6	STORM DRAIN - TYPE "P" HEADWALLS
W-1	WATER - WATER SERVICE, GENERAL NOTES & TRENCH DETAILS
W-2	WATER - GATE VALVE, BLOCKING, MARKER & LOWERING DETAILS
W-3	WATER - BLOW OFF & AIR RELEASE VALVE DETAILS
W-4	WATER - FIRE HYDRANT, TEMPORARY FLUSH VALVE, & BORE DETAILS
W-5	WATER- 3" & LARGER WATER SERVICE DETAILS
W-6	WATER- 3" & LARGER BACKFLOW PREVENTION DEVICE DETAILS
SS-1	SANITARY SEWER - MANHOLE & CLEANOUT DETAILS
SS-2	SANITARY SEWER - SERVICE & TRENCH DETAILS
M-1	MISCELLANEOUS- TRENCH DETAILS
MS-1	MATERIAL SPECIFICATIONS
MS-2	MATERIAL SPECIFICATIONS

GENERAL NOTES:

1. ALL CONSTRUCTION MATERIALS, METHODS AND PLACEMENT NOT DETAILED BELOW SHALL MEET OR EXCEED THE STANDARD SPECIFICATIONS OF THE NORTH CENTRAL TEXAS COUNCIL OF GOVERNMENTS, OCTOBER 2004 EDITION, UNLESS SUPERSEDED BY CITY OF MANSFIELD STANDARD SPECIFICATIONS OR MATERIAL TESTING POLICIES.
2. SEE SHEET P-3 FOR PAVING GENERAL NOTES.
3. SEE OTHER PAVING DETAIL SHEETS FOR WALKWAY, CURB, JOINTING, STRIPING AND OTHER RELATED CONSTRUCTION DETAILS.
4. ALL CURBS MUST BE MONOLITHIC.

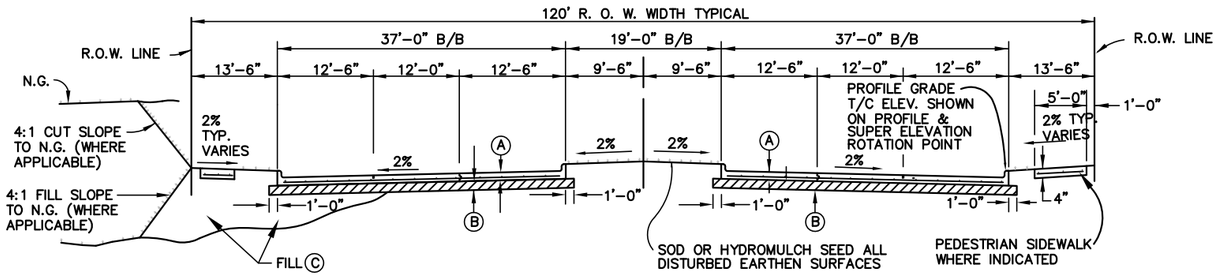

STANDARD SECTION

N.T.S.

(A) 9" CONCRETE PAVEMENT WITH MONOLITHIC CURB WITH #4 STEEL REINFORCING BARS ON 18" CENTERS BOTH WAYS IN CENTER OF SLAB.

(B) 12" STABILIZED SUBGRADE (SEE SHEET P-3, NOTE 5).

(C) FILL EMBANKMENTS (EXTENDING TO EDGE OF SLOPES) SHALL BE COMPACTED TO A MINIMUM 95% ASTM D698 IN MAXIMUM 12" LOOSE, 6" COMPACTED LAYERS. MOISTURE SHALL BE OPTIMUM AND ABOVE.

NOTE:

PROVIDE EROSION CONTROL BLANKET ON SLOPES GREATER THAN 4:1.

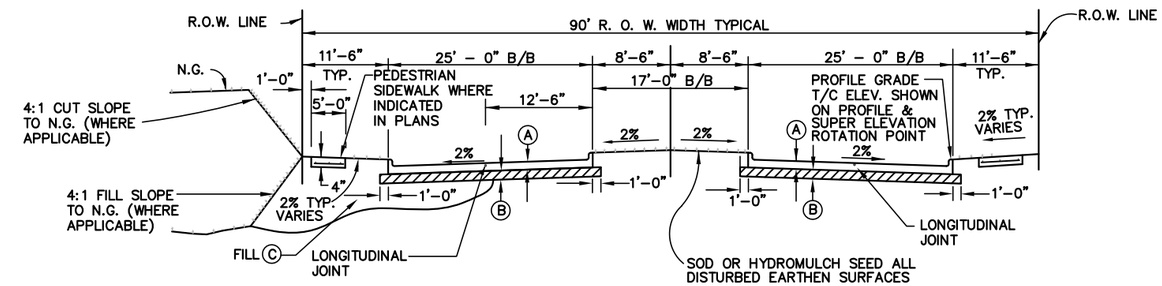

STANDARD SECTION

N.T.S.

NOTE:

PROVIDE EROSION CONTROL BLANKET ON SLOPES GREATER THAN 4:1.

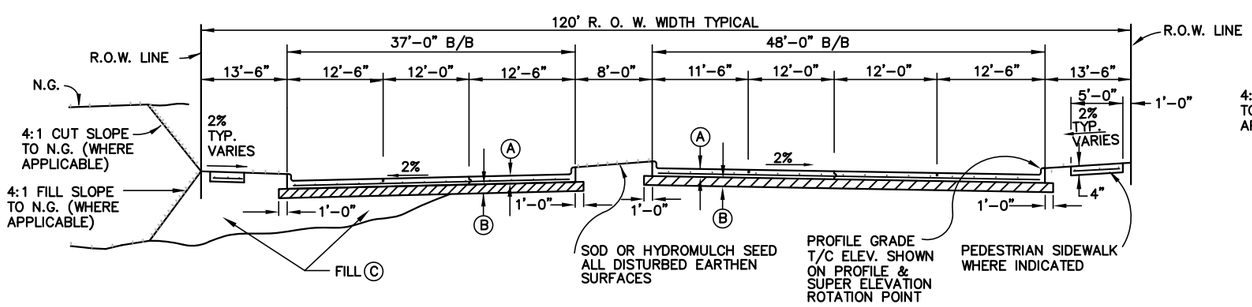

LEFT TURN SECTION

N.T.S.

6 – LANE DIVIDED PRINCIPLE ARTERIAL (P6D) TYPICAL SECTIONS

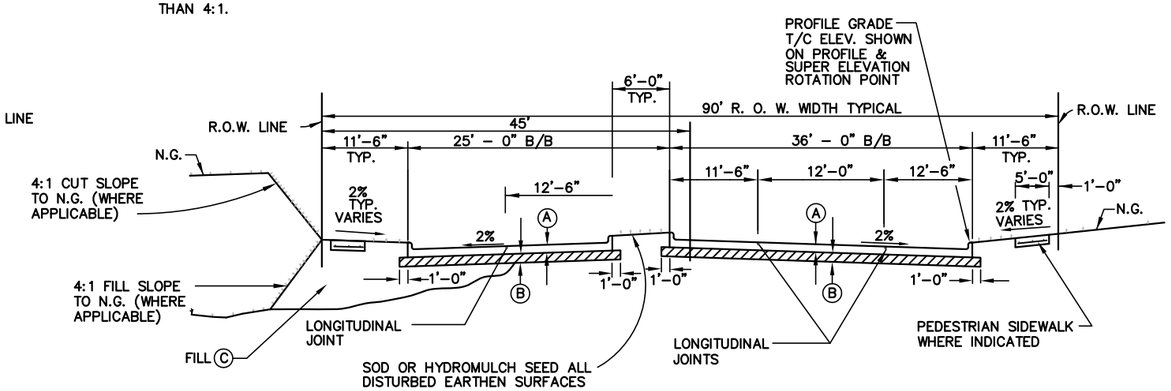

LEFT TURN SECTION

N.T.S.

4 – LANE DIVIDED MAJOR ARTERIAL (M4D) TYPICAL SECTIONS

TYPICAL STREET SECTIONS: ARTERIALS		
CITY OF MANSFIELD STANDARD CONSTRUCTION DETAILS		
PAVING	DATE: NOV. 2014	SHEET NO. P-1

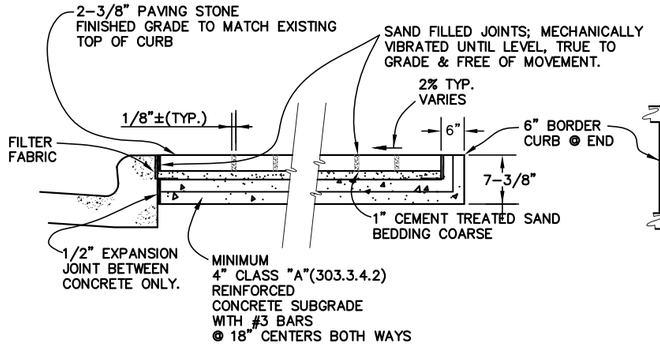

TYPICAL CROSS SECTION

N.T.S.

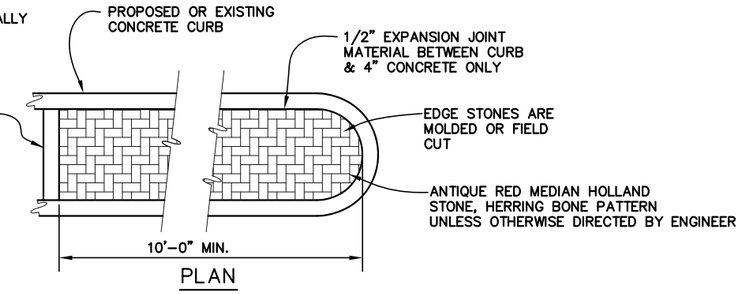

PLAN

MEDIAN PAVING STONE DETAIL

N.T.S.

GENERAL NOTES:

1. ALL CONSTRUCTION MATERIALS, METHODS AND PLACEMENT NOT DETAILED BELOW SHALL MEET OR EXCEED THE STANDARD SPECIFICATIONS OF THE NORTH CENTRAL TEXAS COUNCIL OF GOVERNMENTS, OCTOBER 2004 EDITION UNLESS SUPERSEDED BY CITY OF MANSFIELD STANDARD SPECIFICATIONS, OR MATERIAL TESTING POLICIES.
2. PVC TO BE INSTALLED CONTINUOUS ACROSS INTERSECTION, EXTENDING TO 5' BEHIND CURBS OR PAVE STONES, TERMINATING IN PULL BOX W/LONG SWEEP 90° BENDS & CAPPED (DFW D-1500, OLSB).
3. RED MARKER TAPE IS TO BE INSTALLED ON THE ENDS OF THE CONDUIT.
4. THE EXACT LOCATIONS WHERE THE CONDUIT CROSSES UNDER THE PAVEMENT IS TO BE MARKED WITH RED PAINT ON THE CURB OR PAVING.
5. A NYLON CORD SHALL BE PLACED IN ALL CONDUIT. THE CORD SHALL EXTEND A MINIMUM 1' FROM THE END OF THE CONDUIT.
6. ALL CONDUIT SHALL BE PLACED ADJACENT TO THE CURB WITH A BURY DEPTH OF 3'-0" BELOW FINISHED GRADE AND BE SPACED ONE FOOT APART.
7. SCH. 40 CONDUIT PLACEMENT SHALL BE WEST OF CENTER LINE OF ELECTRICAL CONDUIT ON STREETS RUNNING NORTH & SOUTH & NORTH OF CENTERLINE OF ELECTRIC CONDUIT ELECTRIC ON STREETS RUNNING EAST & WEST. SCH. 80 CONDUIT (ELECTRIC) TO BE PLACED AT CENTERLINE OF R.O.W.
8. CONDUIT BACK FILL TO BE NATIVE MATERIAL MECHANICALLY TAMPED TO 95% OF ASTM D698, OPTIMUM MOISTURE OR ABOVE PER NCTCOG ITEM 504.

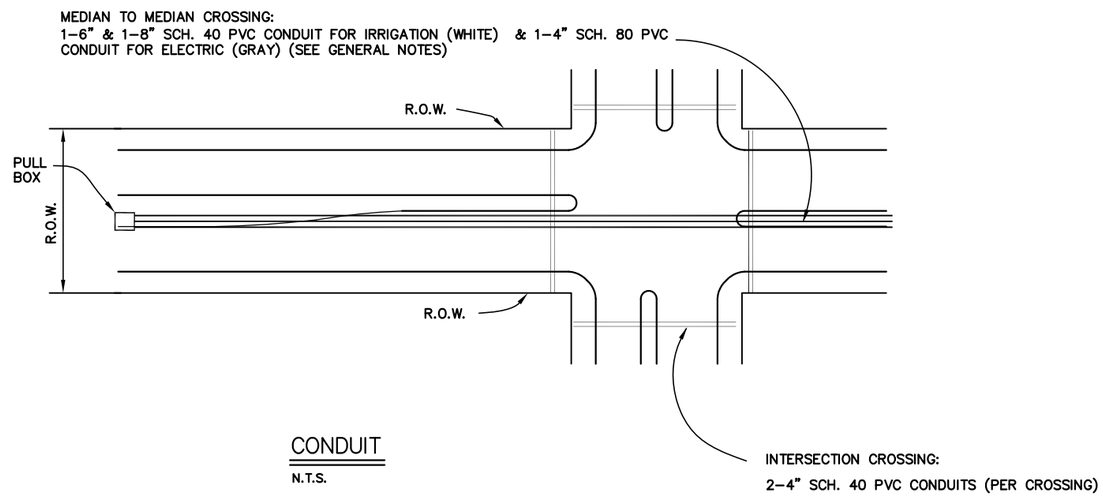

CONDUIT

N.T.S.

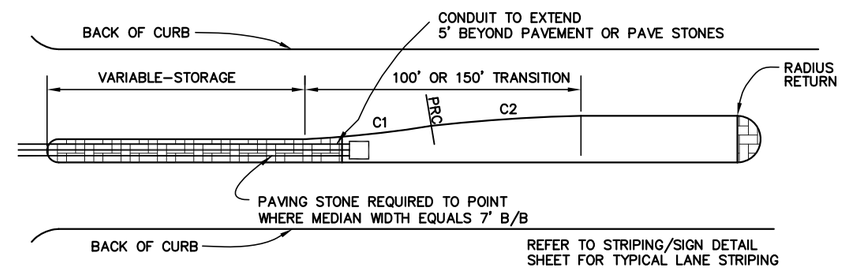

LEFT TURN LANE LAYOUT DETAIL

N.T.S.

1. ALL DIMENSIONS ARE TO BACK OF CURB UNLESS NOTED OTHERWISE.
2. TURN LANES TO BE 11'-0" TO FACE OF CURB, MAIN LANES 12'-0".
3. MEDIAN NOSES TO BE SEMI-CIRCLES, EXCEPT WHERE 4 LANES INTERSECT 4 LANES OR LARGER.
4. TURN LANES AND MEDIAN OPENINGS TO BE DETERMINED BY ROADWAY AND ACCESS MANAGEMENT DESIGN CRITERIA.

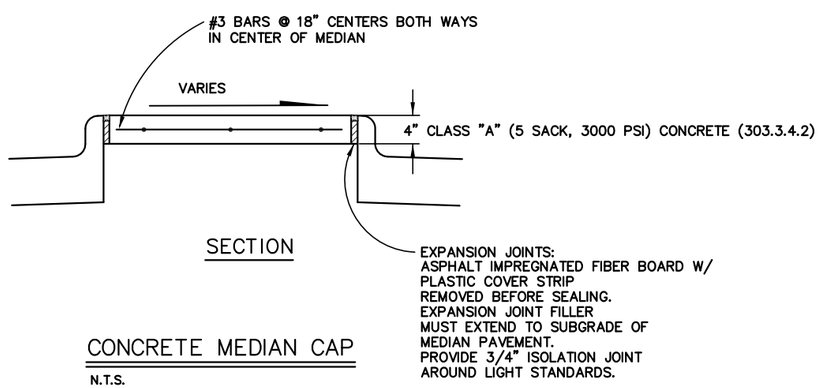

SECTION

CONCRETE MEDIAN CAP

N.T.S.

MEDIAN, LEFT TURN LANE, & CONDUIT DETAILS		
CITY OF MANSFIELD ENGINEERING DEPARTMENT		
PAVING	DATE: NOV. 2014	SHEET NO. P-2

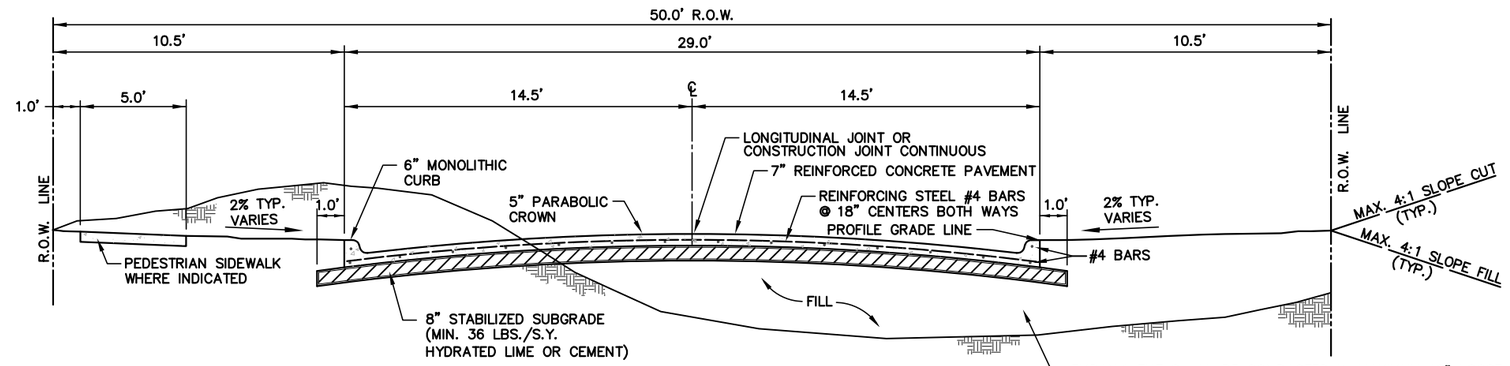

NOTE:

PROVIDE EROSION CONTROL BLANKET ON SLOPES GREATER THAN 4:1.

LOCAL RESIDENTIAL (RES2U)

N.T.S.

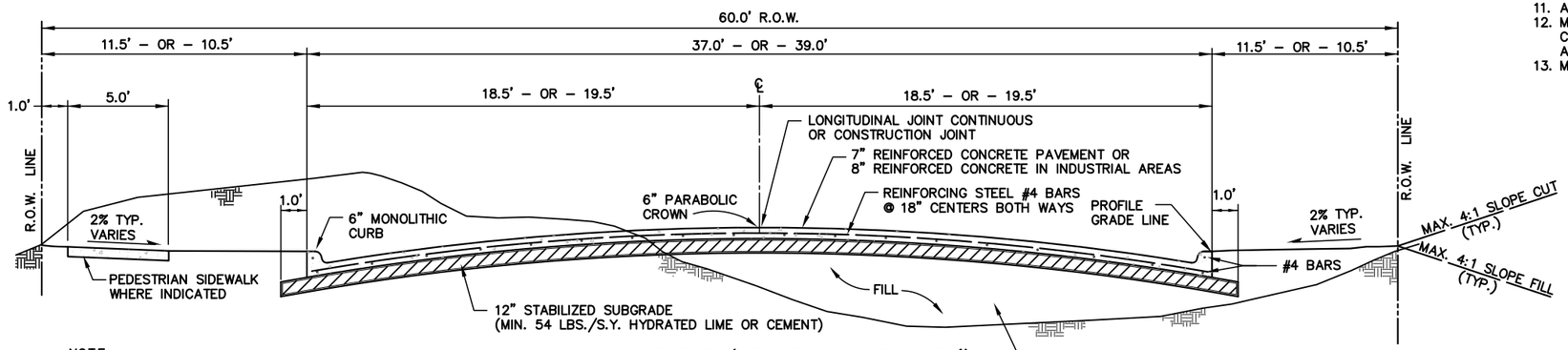

NOTE:

PROVIDE EROSION CONTROL BLANKET ON SLOPES GREATER THAN 4:1.

LOCAL COLLECTOR (RESIDENTIAL, C2U, 37')

N.T.S.

MINOR COLLECTOR (C3U, 39')

N.T.S.

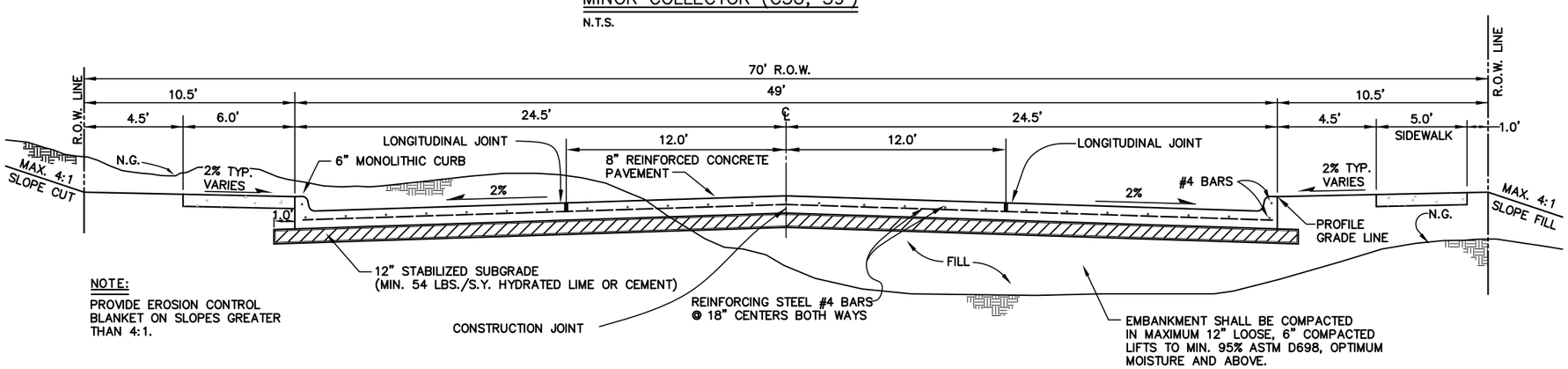

NOTE:

PROVIDE EROSION CONTROL BLANKET ON SLOPES GREATER THAN 4:1.

MAJOR COLLECTOR (C4U)

N.T.S.

GENERAL NOTES:

1. ALL CONSTRUCTION MATERIALS, METHODS AND PLACEMENT NOT DETAILED BELOW SHALL MEET OR EXCEED THE STANDARD SPECIFICATIONS OF THE NORTH CENTRAL TEXAS COUNCIL OF GOVERNMENTS, OCTOBER 2004 EDITION UNLESS SUPERSEDED BY CITY OF MANSFIELD STANDARD SPECIFICATIONS OR MATERIAL TESTING POLICIES.
2. CONCRETE FOR MACHINE PAVING TO BE CLASS P1 (5½ SACK, 4000 PSI) AND CONCRETE FOR HAND PAVING TO BE CLASS P2 (6 SACK, 4500 PSI) PER NCTCOG SPEC. 303.3.4.2. ALL CONCRETE SHALL CONTAIN SUFFICIENT AIR ENTRAINING AGENT TO YIELD 5% AIR CONTENT. ALL OTHER ADMIXTURES SHALL REQUIRE THE PERMISSION OF THE ENGINEERING DEPARTMENT. ALL MIX DESIGNS TO BE 100% CRUSHED ANGULAR STONE WITH A MAXIMUM SIZE OF 1". FLY ASH MAY BE USED IN MIX DESIGNS AS DETAILED IN NCTCOG, ITEM 303.2.4, 20% MAX. FINE AGGREGATE NOT TO EXCEED 50% MANUFACTURED SAND. BATCH PLANTS REQUIRE SPECIAL USE PERMIT.
3. AN APPROVED WHITE PIGMENTED CURING COMPOUND SHALL BE APPLIED TO THE SURFACE OF THE PAVEMENT AS SOON AS IT HAS BEEN PLACED AND FINISHED.
4. CONCRETE STREET PAVEMENT SHALL BE CONSTRUCTED BY USE OF A PAVING MACHINE THAT INCORPORATES AN AUGER/STRIKE OFF UNIT, HYDRAULICALLY POWERED, MOTOR–IN–HEAD, VARIABLE SPEED, INDEPENDENTLY CONTROLLED VIBRATORS (MIN. 4 VIBRATORS 2" DIAMETER HEADS MIN., SPACE 2' APART MAX.) AND AN INTEGRATED MONOLITHIC VIBRATED "CURB MULE". HAND PLACEMENT OF STREET PAVEMENT WILL ONLY BE ALLOWED FOR AREAS NOT POSSIBLE WITH A MACHINE (EX. CUL–DE–SACS, INTERSECTIONS, EYEBROWS, SMALL BLOCK–OUTS, ETC.).
5. CITY OF MANSFIELD SHALL REVIEW LIME SERIES RECOMMENDATION FROM GEOTECHNICAL ENGINEER TO DETERMINE PERCENTAGE OF LIME OR PORTLAND CEMENT NECESSARY TO PREPARE SUBGRADE. 6% (36 LBS/S.Y. FOR 8" OR 54 LBS/S.Y. FOR 12") WILL BE MINIMUM LIME OR CEMENT CONTENT. SEE C.O.M. MATERIAL TESTING POLICIES FOR ADDITIONAL INFORMATION.
6. ALL REINFORCING STEEL SHALL BE DEFORMED BARS CONFORMING TO ASTM A–615 GRADE 60. REINFORCING STEEL SHALL BE PLACED WITH A MINIMUM OF 1½" OF COVER FOR #5 BARS OR SMALLER. WHERE REINFORCING BARS ARE SPLICED, A 30 DIAMETER LAP SHALL BE USED.
7. SEE JOINT DETAIL SHEET P–5 FOR JOINT DETAILS, SPACING, JOINT MATERIALS, AND SEALANT.
8. THE CONTRACTOR SHALL INSTALL SUPPORTING CHAIRS, WITH PLATES OR BASES, FOR REINFORCING STEEL ON A ONE SQUARE YARD SPACING IN ALL CONCRETE PAVEMENT.
9. PAVER TO INSTALL GRIPPER PLUGS IN PIPE ENDS OF ALL MANHOLES OR FALSE BOTTOMS IN "IN SERVICE" MANHOLES PRIOR TO EXCAVATION OR SUBGRADE PREPARATION. MANHOLES SHALL BE PLACED MONOLITHIC WITH STREET.
10. ALL 4 LANE THOROUGHFARES OR LARGER SHALL HAVE SUBDRAINS INSTALLED AT BACK OF CURB ON BOTH SIDES OF ROAD WHERE GROUND WATER OR IRRIGATION WATER IS ANTICIPATED TO BE PRESENT. CITY ENGINEER SHALL DETERMINE LOCATIONS (SEE SHEET P–7).
11. ALL STREETS SHALL RECEIVE MEDIUM BAKER BROOM FINISH.
12. MAINTAIN 2% MAXIMUM CROSS SLOPE FOR FULL WIDTH OF PEDESTRIAN ROUTES AND CROSSWALKS THAT CROSS DRIVEWAYS AND INTERSECTIONS. SEE SHEETS P–6 & P–8 FOR ADDITIONAL ACCESSIBILITY REQUIREMENTS.
13. MATERIALS USED AS TOPSOIL MUST BE PRE–APPROVED BY ENGINEER.

TYPICAL STREET SECTIONS: RESIDENTIAL AND COLLECTORS		
CITY OF MANSFIELD		
STANDARD CONSTRUCTION DETAILS		
PAVING	DATE: NOV. 2014	SHEET NO. P–3

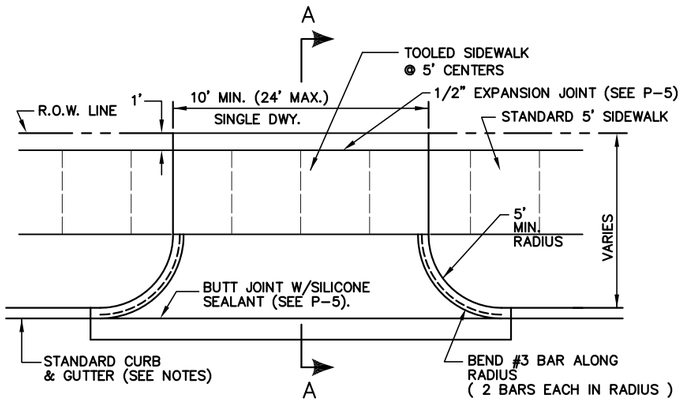

PLAN VIEW

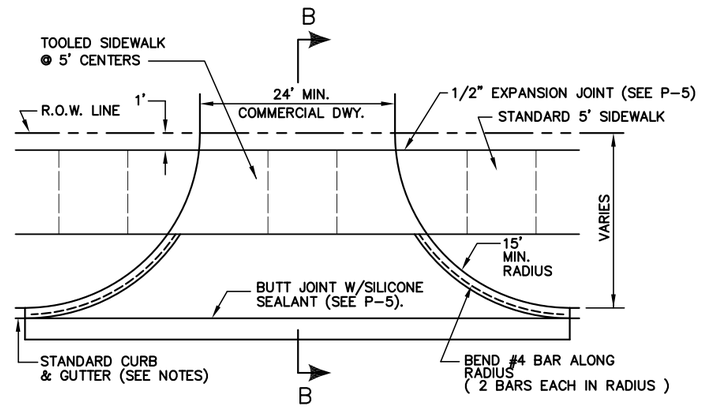

PLAN VIEW

GENERAL NOTES:

1. ALL CONSTRUCTION MATERIALS, METHODS AND PLACEMENT NOT DETAILED BELOW SHALL MEET OR EXCEED THE STANDARD SPECIFICATIONS OF THE NORTH CENTRAL TEXAS COUNCIL OF GOVERNMENTS, OCTOBER 2004 EDITION UNLESS SUPERSEDED BY CITY OF MANSFIELD STANDARD SPECIFICATIONS OR MATERIAL TESTING POLICIES.
2. ALL CONCRETE SHALL MEET THE QUALITY ON GENERAL PAVING STANDARDS SHEET.
3. DRIVE APPROACH BLOCK OUTS TO BE 2'6" FROM BACK OF CURB INTO SLAB AND EXTEND FROM CURB RETURN TO CURB RETURN.
4. ALL CONCRETE SHALL BE CLASS "C" CONTAINING A MINIMUM OF 6 SACKS OF TYPE 1 CEMENT PER YARD AND HAVE A MINIMUM COMPRESSIVE STRENGTH OF 3,600 P.S.I. AT 28 DAYS (303.3.4.2). AGGREGATE SHALL BE 100% CRUSHED ANGULAR STONE (1" MAX.). ALL CONCRETE PLACED SHALL CONTAIN SUFFICIENT AIR ENTRAINING AGENT TO YIELD 5% AIR CONTENT. ALL OTHER ADMIXTURES SHALL REQUIRE THE PERMISSION OF THE ENGINEERING DEPARTMENT.
   FLY ASH MAY BE USED IN MIX DESIGNS AS DETAILED IN NCTCOG ITEM 303.2.4., 20% MAX. FINE AGGREGATE NOT TO EXCEED 50% MANUFACTURED SAND.
5. ALL DRIVE APPROACHES AND SIDEWALKS SHALL RECEIVE A LIGHT BROOM FINISH.

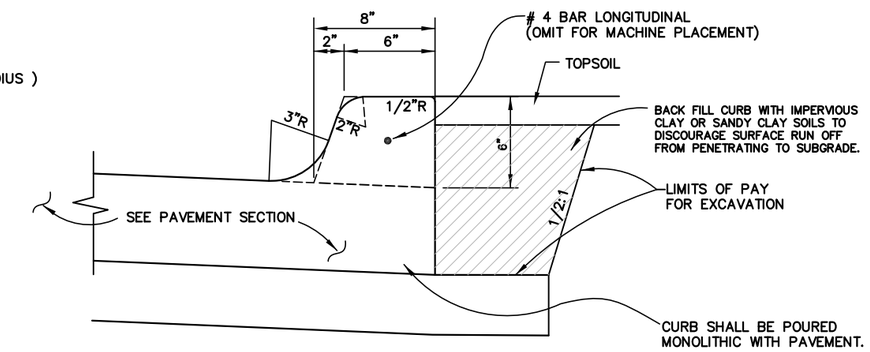

TYPICAL SECTION – MONOLITHIC CURB

N.T.S.

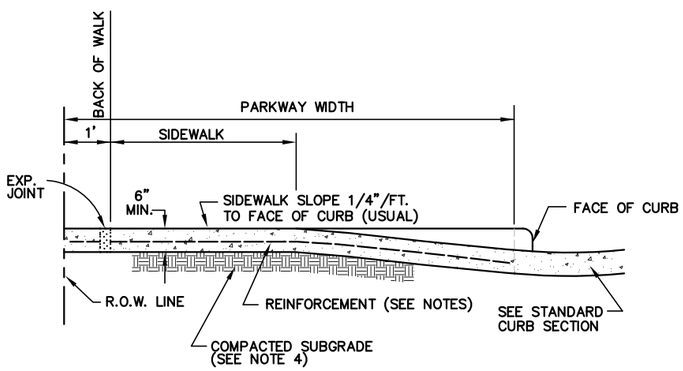

SECTION A–A

NOTES:

1. EXISTING CURB AND GUTTER, IF ANY, MUST BE SAWED.
2. REINFORCE DRIVE WITH #3 BARS AT 18" CENTERS, BOTH WAYS, SUPPORTED BY STANDARD CHAIRS (3' MAX. SPACING).
3. SIDEWALK SECTION THRU DRIVEWAY TO BE THE SAME THICKNESS AS THE DRIVEWAY APPROACH & TOOLED TO MATCH SIDEWALK.
4. SCARIFY, REMOVE ORGANIC MATERIALS, AND COMPACT SUBGRADE TO MINIMUM 95% ASTM D698, OPTIMUM MOISTURE CONTENT OR ABOVE.
5. DRILL INTO EXISTING STREET AT 18" CENTERS PER DETAIL SHT. P–5, BUTT JOINT DETAIL.
6. DRIVEWAY CURB CUT SHALL NOT EXTEND INTO INTERSECTION RADIUS OR CURB INLET TRANSITION.

RESIDENTIAL DRIVE APPROACH

N.T.S.

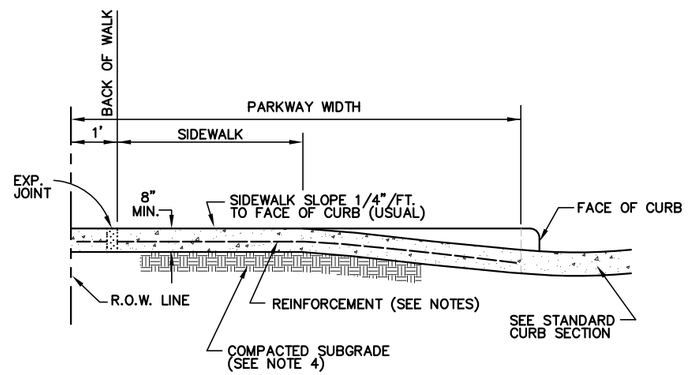

SECTION B–B

NOTES:

1. EXISTING CURB AND GUTTER, IF ANY, MUST BE SAWED.
2. REINFORCE DRIVE WITH #4 BARS AT 12" CENTERS, BOTH WAYS, SUPPORTED BY STANDARD CHAIRS (3' MAX. SPACING).
3. SIDEWALK SECTION THRU DRIVEWAY TO BE THE SAME THICKNESS AS THE DRIVEWAY APPROACH & TOOLED TO MATCH SIDEWALK.
4. SCARIFY, REMOVE ORGANIC MATERIALS, AND COMPACT SUBGRADE TO MINIMUM 95% ASTM D698, OPTIMUM MOISTURE CONTENT OR ABOVE.
5. DRILL INTO EXISTING STREET AT 12" CENTERS PER DETAIL SHT. P–5, BUTT JOINT DETAIL.
6. DRIVEWAY CURB CUT SHALL NOT EXTEND INTO INTERSECTION RADIUS OR CURB INLET TRANSITION.

COMMERCIAL DRIVE APPROACH

N.T.S.

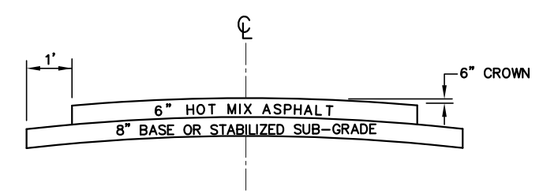

NOTE:

BASE–8" CRUSHED STONE BASE COMPACTED TO A MINIMUM OF 95% OF STANDARD PROCTOR AT OPTIMUM MOISTURE OR 8" LIME STABILIZED MATERIAL.

ASPHALT–4" BINDER BASE
2" TYPE "D" SURFACE
(CRUSHED STONE TYPE)

TACK COAT – 0.05 GAL/S.Y. OF MC – 30 TO BE APPLIED IF SURFACE OF HMAC IS OPENED TO TRAFFIC OR ALLOWED TO SET BETWEEN PLACEMENTS.

TEMPORARY ASPHALT TRANSITION DETAIL

N.T.S.

DRIVE APPROACHES, CURB, & ASPHALT DETAILS		
CITY OF MANSFIELD STANDARD CONSTRUCTION DETAILS		
PAVING	DATE: NOV. 2014	SHEET NO. P–4

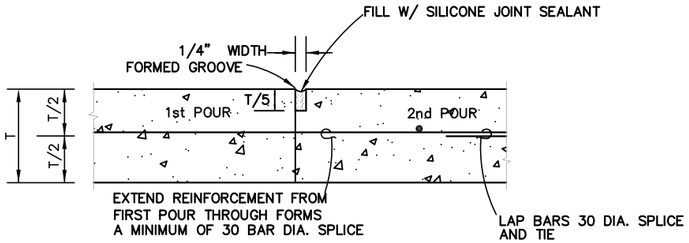

CONSTRUCTION JOINT

N.T.S.

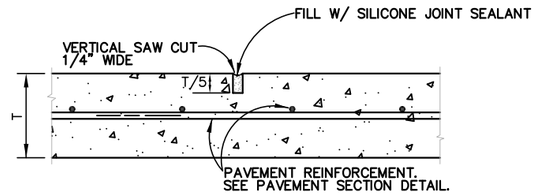

SAWED CONTRACTION JOINT

N.T.S.

GENERAL NOTES:

T= PAVEMENT THICKNESS

1. ALL CONSTRUCTION MATERIALS, METHODS AND PLACEMENT NOT DETAILED BELOW SHALL MEET OR EXCEED THE STANDARD SPECIFICATIONS OF THE NORTH CENTRAL TEXAS COUNCIL OF GOVERNMENTS, OCTOBER 2004 EDITION UNLESS SUPERSEDED BY CITY OF MANSFIELD STANDARD SPECIFICATIONS OR MATERIAL TESTING POLICIES.
2. CONTRACTOR MUST USE MONOLITHIC CURB UNLESS DOWELED CURB IS PRE-APPROVED BY ENGINEERING DEPARTMENT.
3. DOWEL BARS OR REBAR PLACED INTO EXISTING PAVEMENT SHALL BE DRILLED INTO PAVEMENT HORIZONTALLY. PUSHING DOWEL BARS OR REBAR INTO GREEN CONCRETE IS NOT ACCEPTABLE. SECURE DOWEL BARS OR REBAR INTO EXISTING PAVING WITH EPOXY GROUT INJECTED INTO HOLE WITH CAULKING GUN.
4. SEALANT SHALL BE SELF-LEVELING SILICONE PER CITY OF MANSFIELD DETAIL: "SILICONE JOINT SEALANT FOR CONCRETE PAVEMENT."
5. THE CONSTRUCTION JOINT IS TO BE USED BETWEEN SEPARATE POURS OF PROPOSED PAVEMENT. NOTE THAT IT REQUIRES THE REINFORCEMENT TO BE EXTENDED THROUGH THE FORM TO TIE TO THE NEXT POUR. THE BUTT JOINT IS TO BE USED BETWEEN EXISTING CONCRETE PAVEMENT (STREET, DRIVEWAY, OR BLOCK OUT) AND PROPOSED PAVEMENT, UNLESS AN EXPANSION JOINT IS CALLED FOR OR AN "L" BAR MAY BE ATTACHED TO STEEL MAT TO BE BENT OUT INTO NEXT PLACEMENT.

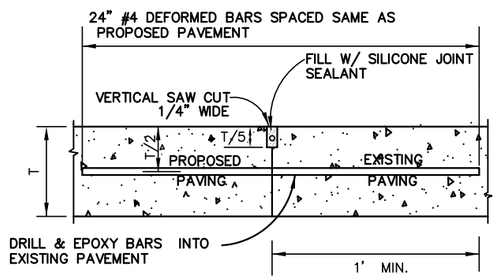

BUTT JOINT

N.T.S.

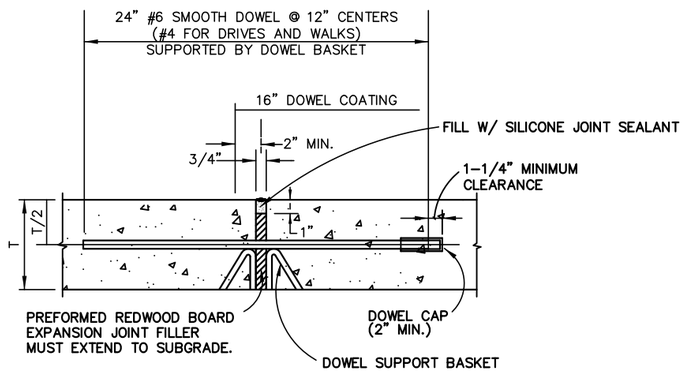

NOTE:

CAPPED SIDE OF
DOWEL TO BE GREASED

EXPANSION JOINT

N.T.S.

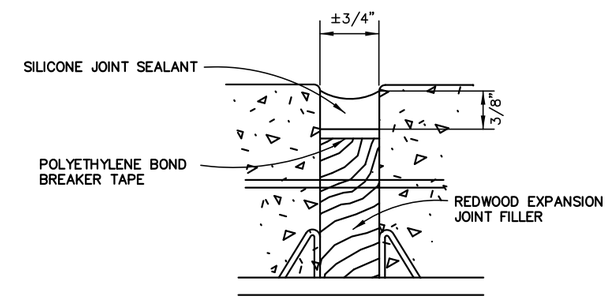

SEALANT DETAIL FOR TRANSVERSE EXPANSION JOINT

N.T.S.

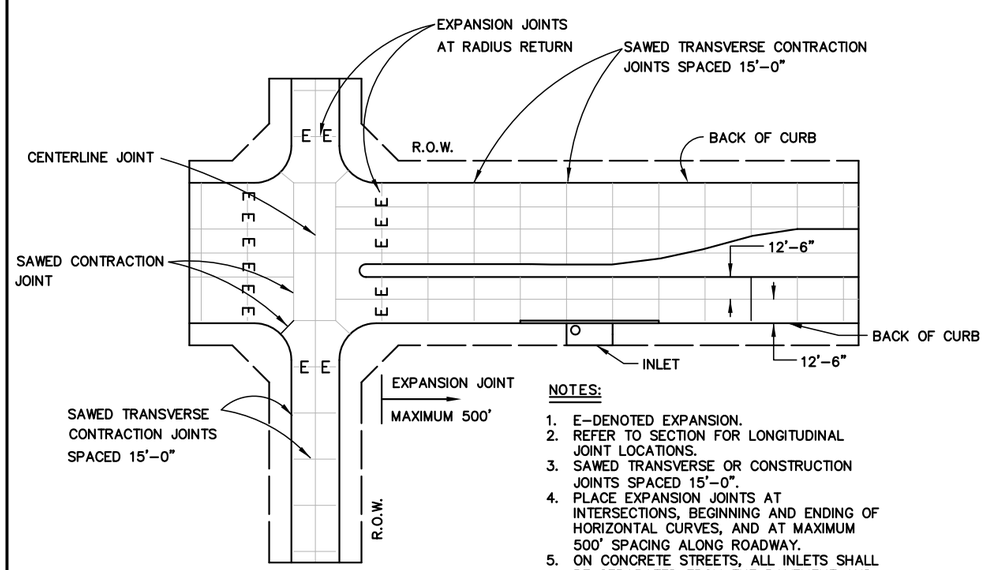

NOTES:

1. E-DENOTED EXPANSION.
2. REFER TO SECTION FOR LONGITUDINAL JOINT LOCATIONS.
3. SAWED TRANSVERSE OR CONSTRUCTION JOINTS SPACED 15'-0".
4. PLACE EXPANSION JOINTS AT INTERSECTIONS, BEGINNING AND ENDING OF HORIZONTAL CURVES, AND AT MAXIMUM 500' SPACING ALONG ROADWAY.
5. ON CONCRETE STREETS, ALL INLETS SHALL BE SEPARATED FROM THE PAVEMENT AND CURB BY BLOCKING OUT AS SHOWN ON SHEET SD-1.

SPACING DIAGRAM FOR TRANSVERSE JOINTS

N.T.S.

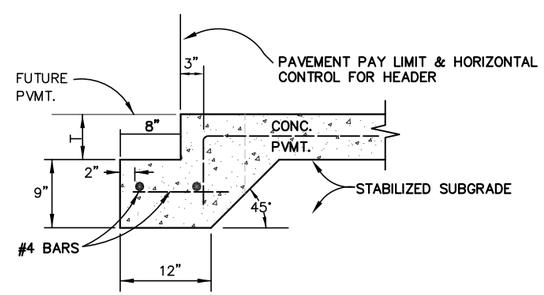

NOTE:

PAVEMENT BARS TO BE BENT
DOWN INTO HEADER AND
PAVEMENT TO BE MONOLITHIC.

CONCRETE HEADER

N.T.S.

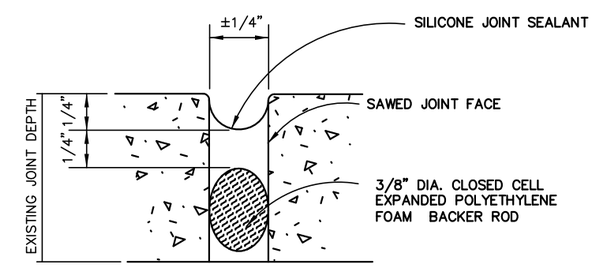

SEALANT DETAIL FOR SAWED CONTRACTION JOINT

N.T.S.

JOINT & SEALANT DETAILS		
CITY OF MANSFIELD STANDARD CONSTRUCTION DETAILS		
PAVING	DATE: NOV. 2014	SHEET NO. P-5

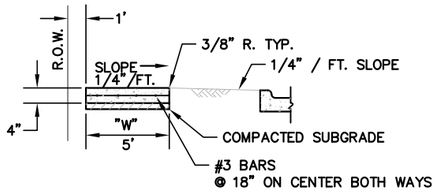

STANDARD SIDEWALK SECTION

N.T.S.

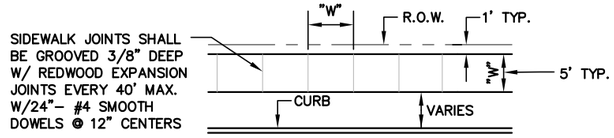

STANDARD SIDEWALK PLAN

N.T.S.

SIDEWALK GENERAL NOTES:

1. ALL CONSTRUCTION MATERIALS, METHODS AND PLACEMENT NOT DETAILED BELOW SHALL MEET OR EXCEED THE STANDARD SPECIFICATIONS OF THE NORTH CENTRAL TEXAS COUNCIL OF GOVERNMENTS, OCTOBER 2004 EDITION UNLESS SUPERSEDED BY CITY OF MANSFIELD STANDARD SPECIFICATIONS OR MATERIAL TESTING POLICIES.
2. CONCRETE SHALL BE A MINIMUM OF 4 INCHES THICK, CLASS "A", (303.3.4.2) CONTAINING A MINIMUM OF 5 SACKS OF TYPE 1 CEMENT PER YARD (3000 PSI). AGGREGATE SHALL BE 100% CRUSHED ANGULAR STONE (1" MAX.). ALL CONCRETE PLACED SHALL CONTAIN SUFFICIENT AIR ENTRAINING AGENT TO YIELD 5% AIR CONTENT. FINE AGGREGATE NOT TO EXCEED 50% MANUFACTURED SAND.
3. CHAMFER ALL EXPOSED EDGES OF CONCRETE WALLS 3/4 INCH.
4. ALL REINFORCING STEEL SHALL BE DEFORMED BARS CONFORMING TO ASTM A–615 GRADE 60. REINFORCING STEEL SHALL BE PLACED WITH A MINIMUM OF 1–½ INCH OF COVER FOR #5 BARS OR SMALLER. WHERE REINFORCING BARS ARE SPLICED, A 30 DIAMETER LAP SHALL BE USED.
5. CURBED RAMP BLOCK OUTS TO BE 1'6" FROM BACK OF CURB INTO SLAB AND EXTEND FROM CURB RETURN TO CURB RETURN.
6. SUBGRADE SHALL CONSIST OF NATIVE SOIL OR SAND COMPACTED TO A DENSITY NOT LESS THAN 95% ASTM D698, OPTIMUM MOISTURE CONTENT OR ABOVE.
7. SIDEWALKS SHALL BE FINISHED BY LIGHTLY BROOMING SURFACE TRANSVERSE TO DIRECTION OF TRAFFIC.
8. AN APPROVED WHITE PIGMENTED CURING COMPOUND SHALL BE APPLIED TO THE SURFACE OF THE PAVEMENT AS SOON AS IT HAS BEEN PLACED AND FINISHED.
9. RETAINING WALLS TO HAVE REDWOOD EXPANSION JOINTS @ 40' MAX. W/24"–#4 SMOOTH DOWELS @ 12" CENTERS.
10. FOR ADDITIONAL INFORMATION AND DETAILS, SEE TXDOT PED STANDARDS, US ACCESS BOARD ProAG, AND TAS REGULATIONS.
11. TRUNCATED DOMES TO BE APPROVED ANTIQUE RED BLOCK PAVERS ONLY.

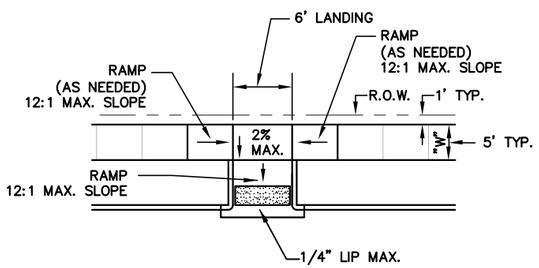

PERPENDICULAR RAMP

N.T.S.

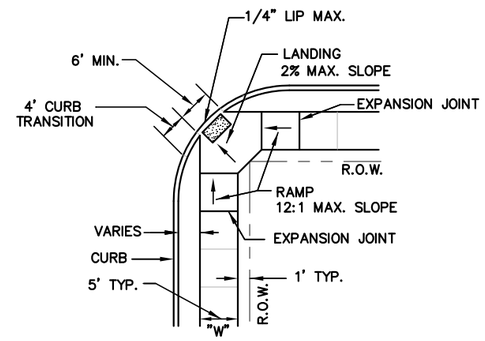

INTERSECTION RAMP

N.T.S.

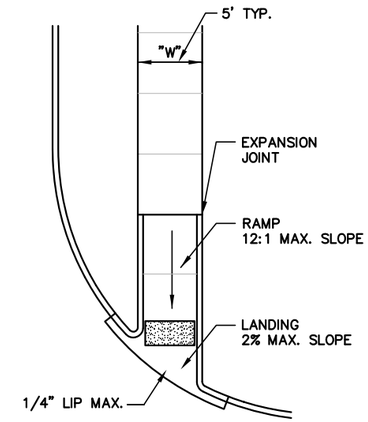

DIRECTIONAL CURB RAMP

N.T.S.

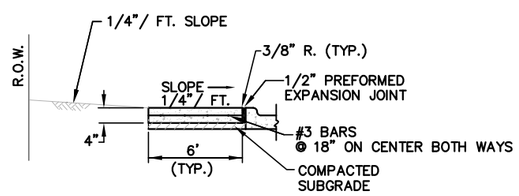

SIDEWALK ABUTTING CURB SECTION

N.T.S.

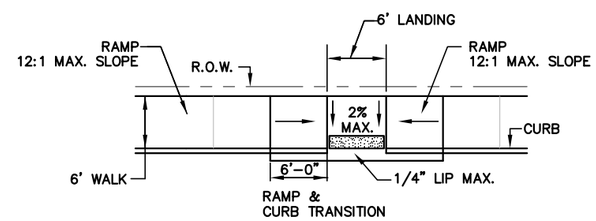

PARALLEL RAMP

N.T.S.

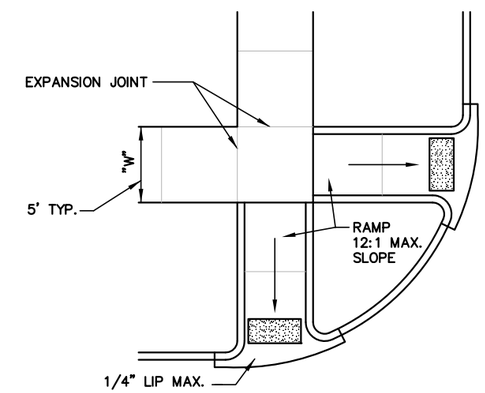

SPLIT RAMPS (STREET RADIUS < 15')

N.T.S.

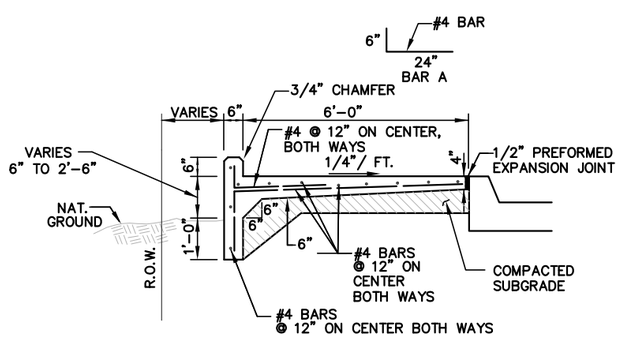

SIDEWALK WITH CURB AND TOEWALL

N.T.S.

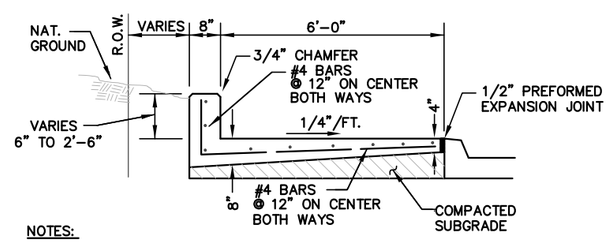

NOTES:

1. INSTALL 1" DIA. PVC WEEP HOLE ON 10' CENTERS.
2. SIDEWALK JOINTING TO BE CONTINUOUS UP FACE OF WALL WITH CHAMFER.

SIDEWALK WITH RETAINING WALL

N.T.S.

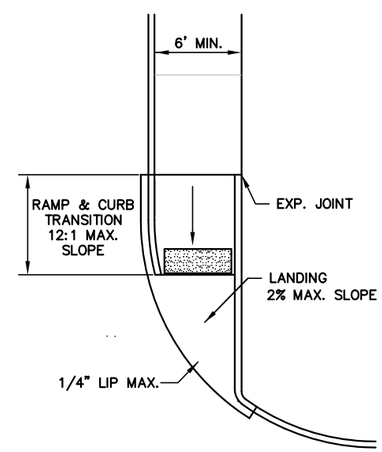

DIRECTIONAL CURB RAMP FOR WALK ABUTTING CURB

N.T.S.

SIDEWALK & RAMP DETAILS		
CITY OF MANSFIELD STANDARD CONSTRUCTION DETAILS		
PAVING	DATE: NOV. 2014	SHEET NO. P–6

TEMPORARY END OF ROAD BARRICADE DETAILS

1. ALL CONSTRUCTION MATERIALS, METHODS AND PLACEMENT NOT DETAILED ABOVE SHALL MEET OR EXCEED THE STANDARD SPECIFICATIONS OF THE NORTH CENTRAL TEXAS COUNCIL OF GOVERNMENTS, OCTOBER 2004 EDITION, UNLESS SUPERSEDED BY CITY OF MANSFIELD STANDARD SPECIFICATIONS OR MATERIAL TESTING POLICIES.
2. ALL INSTALLATION SHALL BE OF NEW MATERIALS. METAL FLEX–BEAM GUARDRAIL SHALL BE 10 GAUGE, GALVANIZED AS PER ASTM A 93. SUBSTITUTIONS OF ANY ITEM SHALL BE APPROVED BY THE ENGINEERING DEPARTMENT PRIOR TO INSTALLATION.
3. ALL POSTS SHALL BE WOLMANIZED TREATED FOR GROUND CONTACT. SQUARE 6"X6" POSTS (ALSO TREATED) MAY BE SUBSTITUTED, PROVIDED THE TOP OF EACH POST IS BEVELED A MINIMUM OF 10° (DEGREES).
4. ALL BOLTS, WASHERS, OR HARDWARE SHALL BE GALVANIZED TREATED TO RESIST RUST. BOLTS SHALL BE OF SUFFICIENT LENGTH TO EXTEND THROUGH THE THICKNESS OF THE NUT.
5. POSTS SHALL NOT BE CONCRETED IN PLACE, BUT SHALL INSTEAD BE BACK FILLED WITH WELL–TAMPED SOIL.
6. STRIPING–BARRICADES SHOULD HAVE STRIPE SLOPE DOWNWARD IN THE DIRECTION TOWARD WHICH TRAFFIC MUST TURN IN DETOURING. WHEN BOTH RIGHT AND LEFT TURNS ARE PROVIDED FOR, CHEVRONS SHALL SLOPE AWAY FROM CENTER. IF NO TURN IS PROVIDED (END OF ROAD), CHEVRONS SLOPE TOWARD CENTER (AS SHOWN).
7. TYPE III BARRICADES SHALL BE USED BEHIND THE GUARDRAIL BARRICADE AND SHALL MEET MUTCD STANDARDS.

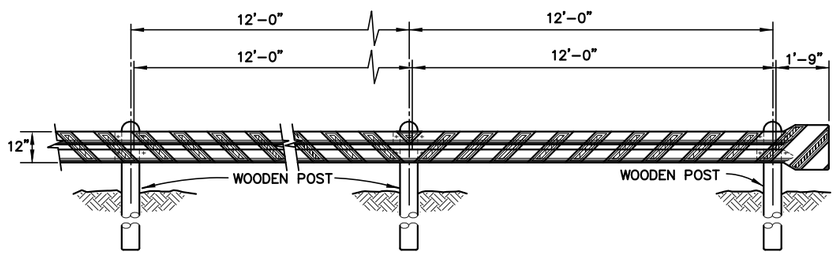

ELEVATION

N.T.S.

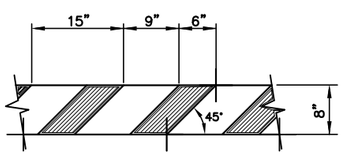

NOTE: DIAGONAL RED REFLECTIVE TAPE SHALL BE APPLIED ON THE FACE OF ALL GUARD PANELS (THE FULL FACE OF THE PANEL SHALL BE COVERED).

TAPE DETAIL

N.T.S.

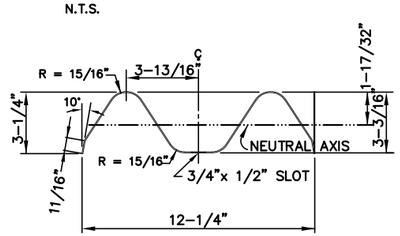

METAL BEAM DETAIL

N.T.S.

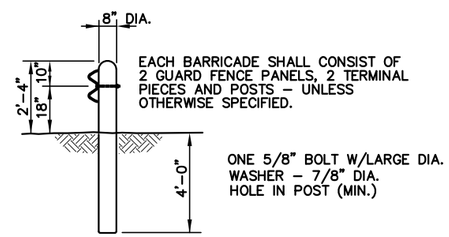

POST DETAIL

N.T.S.

SUBDRAIN DETAIL

1. ALL SUBDRAIN PIPES TO BE 6" DIAMETER.
2. FILLER MATERIAL AROUND SUBDRAIN PIPES SHALL BE ¾" CRUSHED STONE, NCTCOG 504.2.2.1 (a) "AGGREGATE GRADE 4".
3. SUBDRAIN PIPE MATERIAL SHALL BE PERFORATED PVC PIPE OR PERFORATED POLYETHYLENE PIPE ENCASED IN "FILTER FABRIC SLEEVE".
4. ALL SUBDRAINS SHALL BE INSTALLED AFTER PAVEMENT AND PRIOR TO SIDEWALK.
5. CLEANOUTS W/CONCRETE PADS (PER SHEET SS–2) SHALL BE PLACED AT 500' INTERVALS ALONG SUBDRAIN AND AT THE UPSTREAM END OF LINE.
6. CONNECTION TO INLET SHALL BE MADE WITH A SECTION OF 6" SCHEDULE 40 PVC PIPE INTO THE INLET SIDE WALL AT TIME OF INLET CONSTRUCTION. THE SUBDRAIN WILL THEN BE ADAPTED TO THE PERFORATED PIPE.

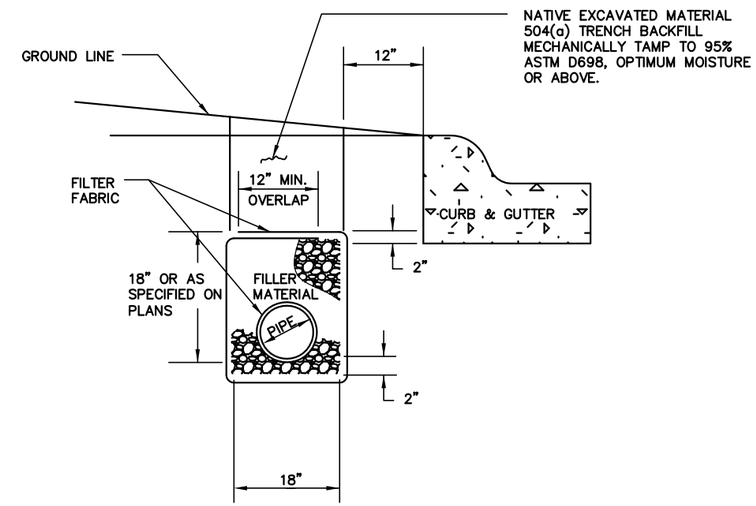

TYPICAL SECTION

N.T.S.

BARRICADE & SUBDRAIN DETAILS		
CITY OF MANSFIELD STANDARD CONSTRUCTION DETAILS		
PAVING	DATE: NOV. 2014	SHEET NO. P–7

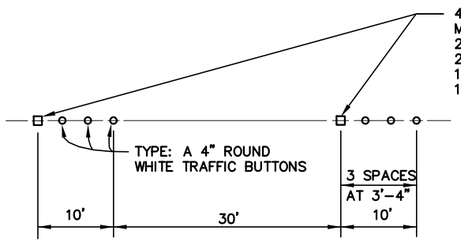

SINGLE BROKEN LINE

N.T.S.

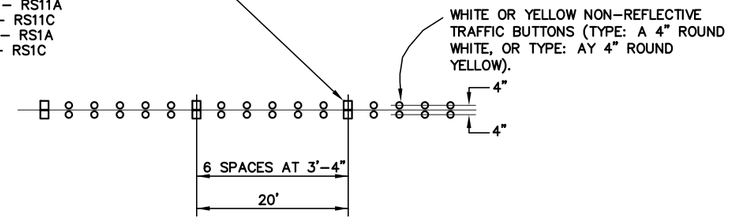

DOUBLE SOLID LINE

N.T.S.

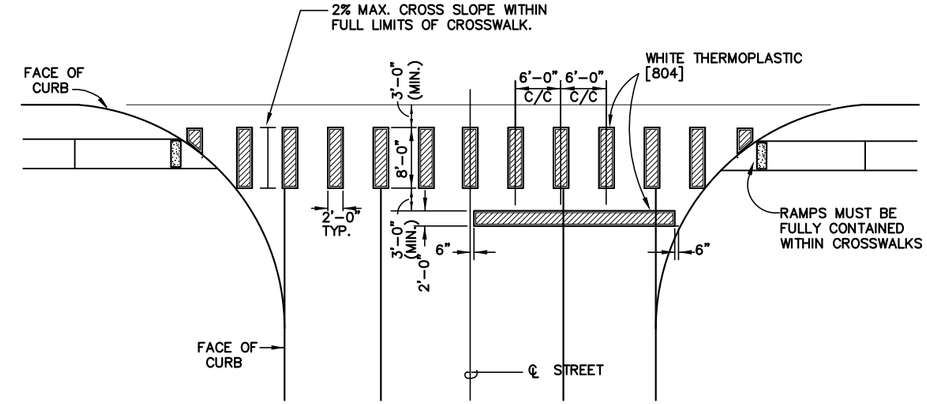

INTERSECTION CROSSWALK

N.T.S.

NOTE:

BUTTONS TO BE AS MANUFACTURED BY APEX UNIVERSAL, INC. AND RAY-O-LITE

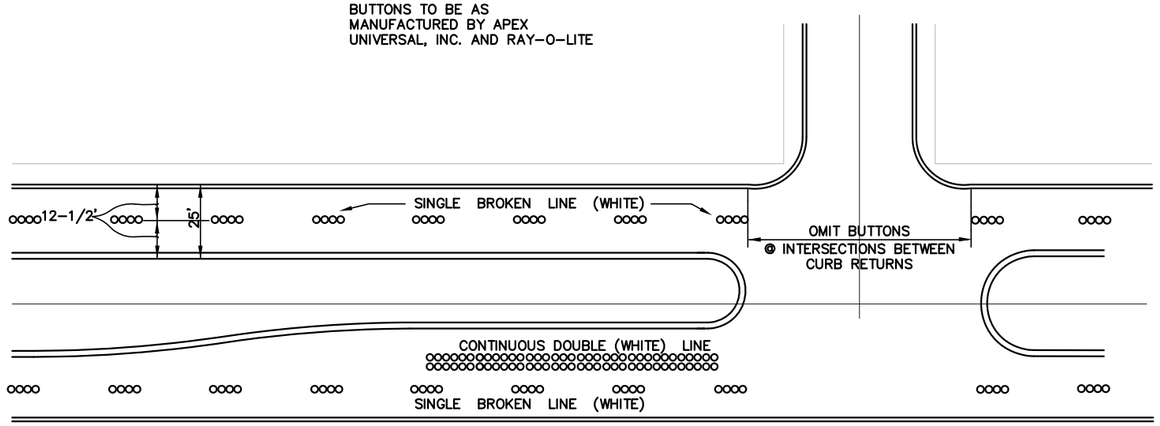

TYPICAL BUTTON LAYOUT FOR 4-LANE ARTERIAL SECTION

N.T.S.

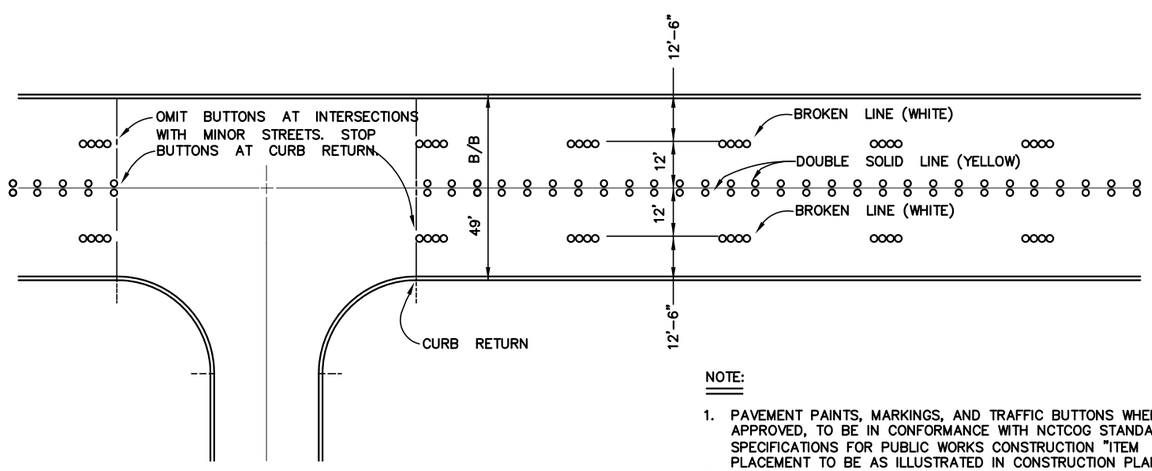

TYPICAL BUTTON LAYOUT FOR 49' B/B STREET SECTION

N.T.S.

NOTE:

1. PAVEMENT PAINTS, MARKINGS, AND TRAFFIC BUTTONS WHERE APPROVED, TO BE IN CONFORMANCE WITH NCTCOG STANDARD SPECIFICATIONS FOR PUBLIC WORKS CONSTRUCTION "ITEM 804." PLACEMENT TO BE AS ILLUSTRATED IN CONSTRUCTION PLANS.
2. DO NOT APPLY PAVEMENT MARKINGS UNTIL PAVEMENT SURFACE AND BUTTON LAYOUT HAS BEEN APPROVED BY ENGINEER.
3. ASPHALT ROADWAYS TO BE MARKED WITH THERMO AND WITH RAISED PAVEMENT REFLECTORS PER TXDOT SPECIFICATIONS.

SIGN SPECIFICATIONS

1. ALL SIGNS SHALL BE STANDARD MUTCD SIGNS ON 0.080" ALUMINUM WITH HIGH INTENSITY GRADE REFLECTIVE SHEETING.
2. ALL SIGN POSTS SHALL BE 1 3/4" (14 GAUGE) SQUARE GALVANIZED POSTS WITH HOLES UTILIZING THE THREE PIECE BREAKAWAY SYSTEM CONSISTING OF THE POSTS LISTED ABOVE, A 2 ¼"X 18" (12 GAUGE) SLEEVE, AND A 2"X 36" (12 GAUGE) ANCHOR.
3. RED SERIES REGULATORY SIGNS SHALL BE 30"X 30".
4. BLACK & WHITE SERIES REGULATORY SIGNS SHALL BE STANDARD MUTCD SIZES EXCEPT FOR SPEED LIMIT AND PARKING SIGNS WHICH SHALL BE 24"X 30".
5. PROHIBITIVE SIGNS SHALL BE 24" SQUARE.
6. YELLOW SERIES WARNING SIGNS SHALL BE 30"X 30" DIAMOND. ALL OTHER WARNING SIGNS SHALL BE STANDARD MUTCD SIGNS. GUIDE SIGNS SHALL BE STANDARD MUTCD SIGNS.
7. SCHOOL SIGNS (PENTAGONAL AND DIAMOND) SHALL BE 30"X 30" EXCEPT SCHOOL SPEED LIMIT 20 MPH SIGNS WHICH SHALL BE 24"X 48".
8. STREET NAME SIGNS SHALL BE ON 9"X 30" OR 36" BLADES. BLADES SHALL BE 0.080" ANODIZED ALUMINUM WITH 1 ½" RADIUS CORNERS, SINGLE SIDED, AND DRILLED FOR BACK TO BACK INSTALLATION ON SQUARE POSTS. BLADES SHALL BE HIGH INTENSITY GRADE GREEN WITH WHITE LETTERS (WHITE SIGN W/GREEN LETTERS FOR PRIVATE STREETS). LETTERS, INCLUDING PREFIXES, ARE 6" HIGH AND SUFFIXES AND BLOCK NUMBERS ARE 3" HIGH. FOR BACK-TO-BACK INSTALLATION, USE DRIVE RIVETS TO ATTACH TO POSTS. PVC SPACERS W/ SIGNMATE RIVETS SHALL BE USED. ALL STREET NAME SIGNS SHALL BE INSTALLED WITH ARTERIAL STREET ON TOP AND SIDE STREET BELOW.
9. ALL SIGNS TO BE INSTALLED ON A TRAFFIC SIGNAL MAST ARM SHALL BE AS INDICATED ON PLANS OR AS DIRECTED BY ENGINEERING DEPARTMENT.

STRIPING \ PAVEMENT MARKERS SIGNS		
CITY OF MANSFIELD ENGINEERING DEPARTMENT		
PAVING	DATE: NOV. 2014	SHEET NO. P-8

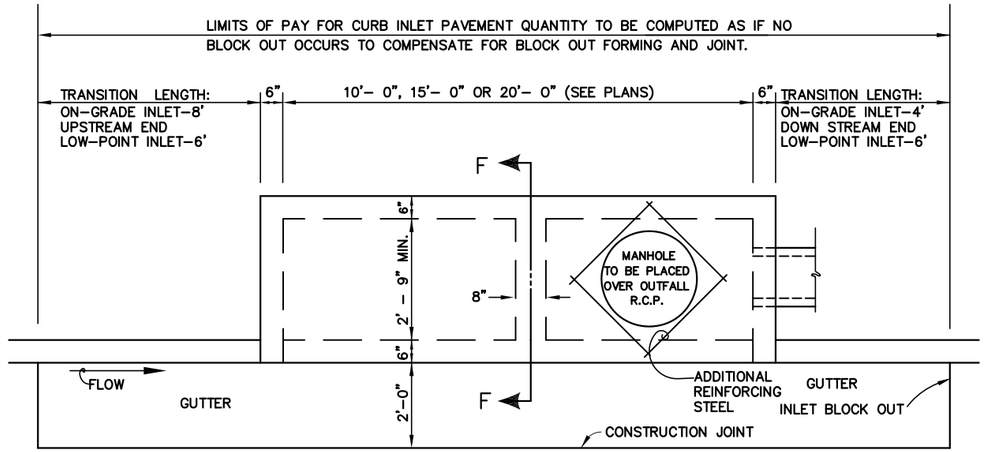

INLET PLAN

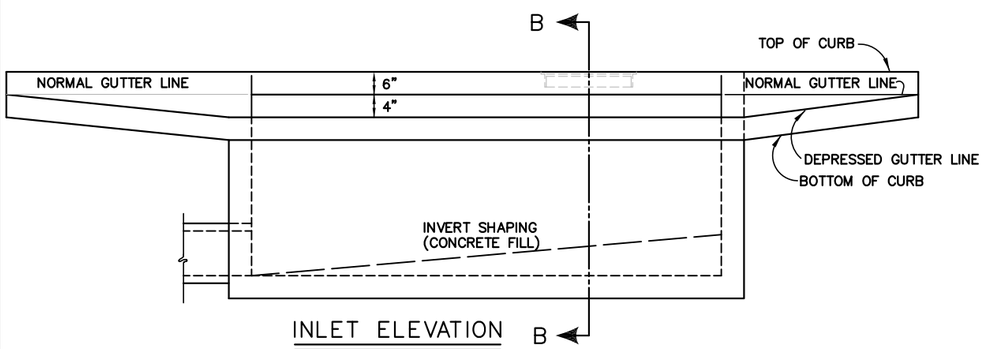

INLET ELEVATION

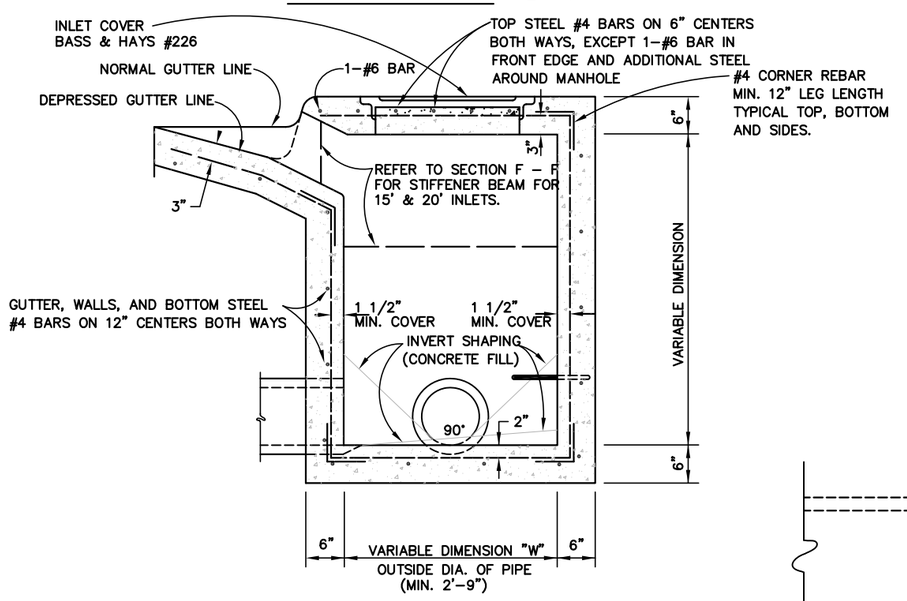

SECTION B-B

STANDARD CURB INLET DETAIL

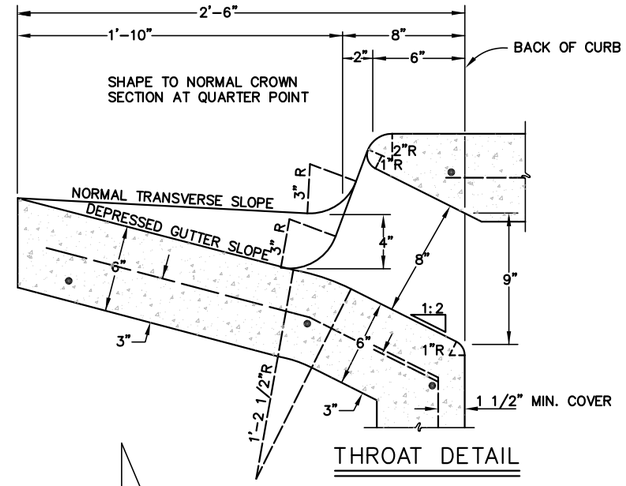

THROAT DETAIL

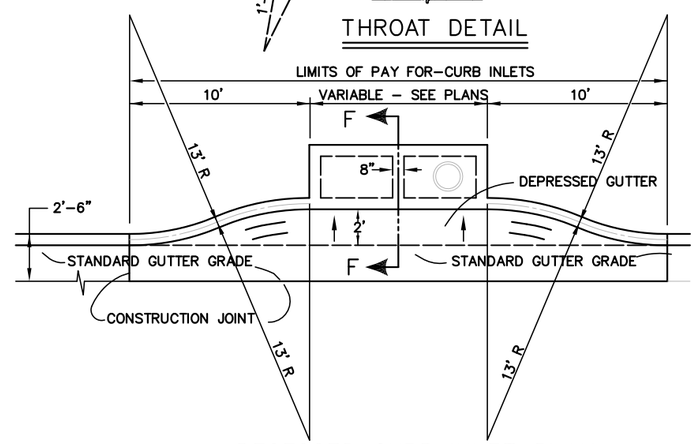

RECESSED CURB INLET PLAN

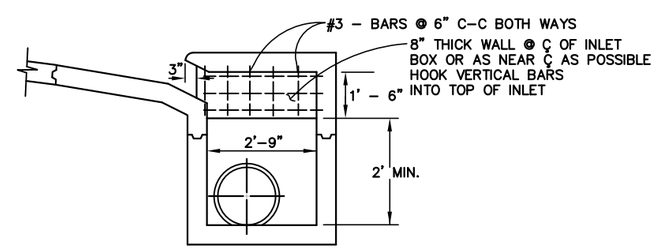

SECTION F-F

INLET MID BOX STIFFENER BEAM FOR 15', 20' & LARGER INLETS

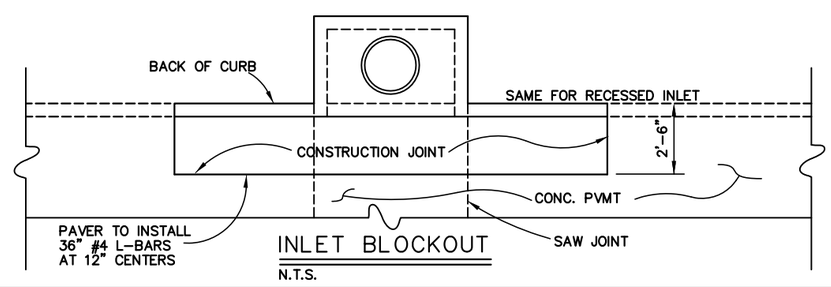

INLET BLOCKOUT

N.T.S.

GENERAL NOTES:

1. ALL CONSTRUCTION MATERIALS, METHODS AND PLACEMENTS NOT DETAILED BELOW SHALL MEET OR EXCEED THE STANDARD SPECIFICATIONS OF THE NORTH CENTRAL TEXAS COUNCIL OF GOVERNMENTS, OCTOBER 2004 EDITION UNLESS SUPERSEDED BY CITY OF MANSFIELD STANDARD SPECIFICATIONS OR MATERIAL TESTING POLICIES.
2. ALL CONCRETE SHALL BE CLASS "C", (6 SACK, 3600 PSI) (702.2.4.2). AGGREGATE SHALL BE 100% CRUSHED ANGULAR STONE (1" MAX). ALL CONCRETE PLACED SHALL CONTAIN SUFFICIENT AIR ENTRAINING AGENT TO YIELD 5% AIR CONTENT. ALL OTHER ADMIXTURES SHALL REQUIRE THE PERMISSION OF THE ENGINEERING DEPARTMENT.
3. ON CONCRETE STREETS ALL INLETS SHALL BE SEPARATED FROM THE PAVEMENT AND CURB BY BLOCKING OUT AROUND INLETS AS SHOWN.
4. ALL REINFORCING STEEL SHALL BE DEFORMED BARS (ASTM A-615 GRADE 60). REINFORCING STEEL SHALL BE PLACED WITH A MINIMUM OF 1-½" COVER.
5. WHERE REINFORCING BARS ARE SPLICED, A MINIMUM 30 DIAMETER LAP SHALL BE USED. MANUFACTURED BENDS OR FACTORY MADE "L" BARS SHALL BE USED IN ALL CORNERS, AND SHALL BE LONG ENOUGH TO PERMIT A MINIMUM OF A 30 DIAMETER SPLICE.
6. INLETS LARGER THAN 10' SHALL HAVE TWO (2) LIDS. ONE TO BE LOCATED OVER OUTFALL AND THE OTHER LOCATED ON THE OPPOSITE SIDE OF THE STIFFENER BEAM.
7. COVER IS A STANDARD CAST IRON LID AND RING WITH AN ATTACHED CHAIN EMBEDDED IN CONCRETE (BASS & HAYES 226).
8. PRE-CAST INLETS WILL NOT BE PERMITTED.
9. TOP AND THROAT TO BE PLACED MONOLITHICALLY.

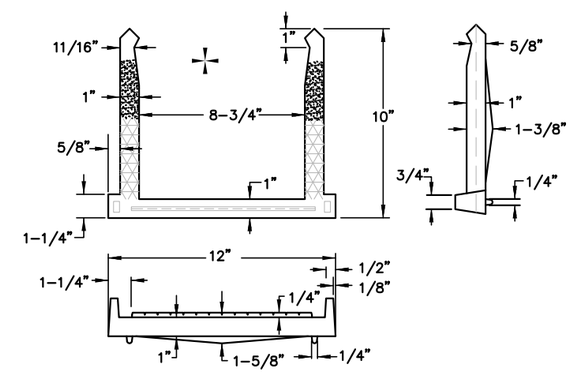

STEP DETAILS

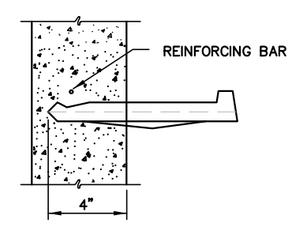

INSTALLATION

NOTE:

1. INLET AND STORM DRAIN STEPS SHALL BE AS MANUFACTURED BY M.A. INDUSTRIES, INC. OF PEACHTREE CITY, GA. OR APPROVED EQUAL. STEPS SHALL REQUIRE A STEEL REINFORCING BAR AS SHOWN IN DETAIL.
2. STEPS SHALL BE PLACED IN ALL INLETS OR STORM VAULTS WHERE THE DIMENSION FROM THE FLOW LINE TO THE TOP OF THE MANHOLE LID MEETS OR EXCEEDS 5'.
3. STEPS SHALL BE PLACED WITH A MAXIMUM VERTICAL SEPARATION OF 16".

INLET STEP DETAIL

CURB INLET DETAILS		
CITY OF MANSFIELD STANDARD CONSTRUCTION DETAILS		
STORM DRAIN	DATE: NOV. 2014	SHEET NO. SD-1

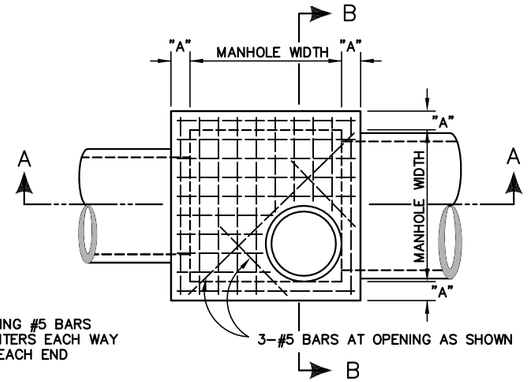

NOTE:
REINFORCING #5 BARS @ 6" CENTERS EACH WAY HOOKED EACH END

3-#5 BARS AT OPENING AS SHOWN

PLAN
N.T.S.

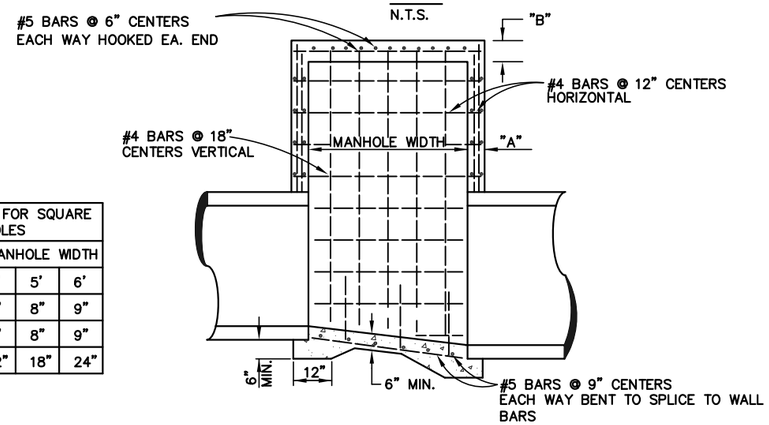

DIMENSIONS FOR SQUARE MANHOLES			
DIMENSION	MANHOLE WIDTH		
	4'	5'	6'
A	8"	8"	9"
B	8"	8"	9"
C	12"	18"	24"

SECTION A-A
N.T.S.

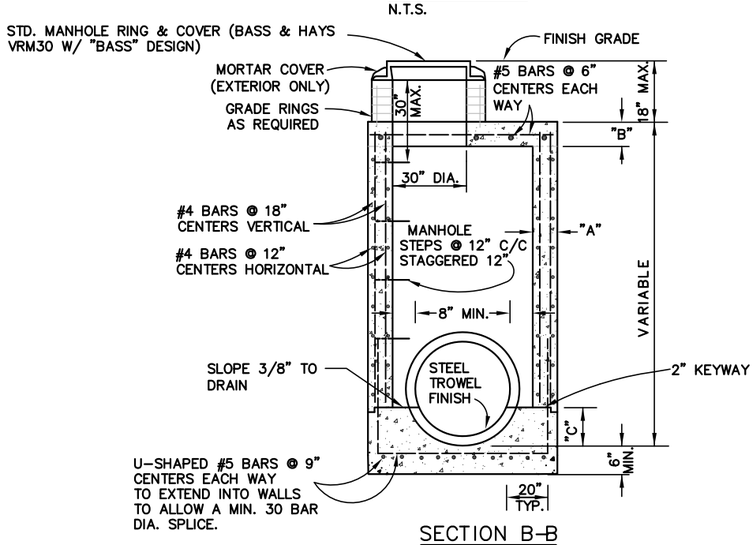

SECTION B-B

STANDARD SQUARE MANHOLE
54" DIAMETER & SMALLER PIPES
N.T.S.

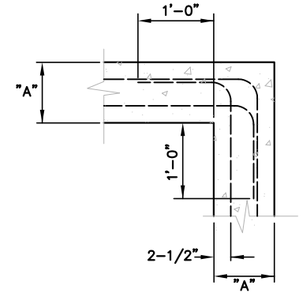

TYPICAL CORNER DETAIL
(PLAN VIEW)
N.T.S.

GENERAL NOTES:

1. ALL CONSTRUCTION MATERIALS, METHODS AND PLACEMENT NOT DETAILED BELOW SHALL MEET OR EXCEED THE STANDARD SPECIFICATIONS OF THE NORTH CENTRAL TEXAS COUNCIL OF GOVERNMENTS, OCTOBER 2004 EDITION UNLESS SUPERSEDED BY CITY OF MANSFIELD STANDARD SPECIFICATIONS OR MATERIAL TESTING POLICIES.
2. ALL REINFORCING STEEL SHALL BE DEFORMED BARS (ASTM A-615 GRADE 60). REINFORCING STEEL SHALL BE PLACED WITH A MINIMUM OF 1-½" COVER FOR #5 BARS AND SMALLER.
3. WHERE REINFORCING BARS ARE SPLICED, A MINIMUM 30 BAR DIAMETER LAP SPLICE SHALL BE USED. MANUFACTURED BENDS OR FACTORY MADE "L" BARS SHALL BE USED IN ALL CORNERS, AND SHALL BE LONG ENOUGH TO PERMIT A MINIMUM OF 30 BAR DIAMETER LAP SPLICE.
4. ALL CONCRETE SHALL BE CLASS "C", (6 SACK, 3600 PSI) (702.2.4.2). AGGREGATE SHALL BE 100% CRUSHED ANGULAR STONE (1" MAX.). ALL CONCRETE PLACED SHALL CONTAIN SUFFICIENT AIR ENTRAINING AGENT TO YIELD 5% AIR CONTENT. ALL OTHER ADMIXTURES SHALL REQUIRE THE PERMISSION OF THE ENGINEERING DEPARTMENT.
5. DROP INLET COVER (BASS & HAYES 226) LID SHALL BE ATTACHED WITH A CHAIN EMBEDDED OR ANCHORED IN CONCRETE.
6. PRE-CAST INLETS OR MANHOLES WILL NOT BE PERMITTED FOR PUBLIC USE.
7. ALL DROP INLETS SHALL HAVE APRON.

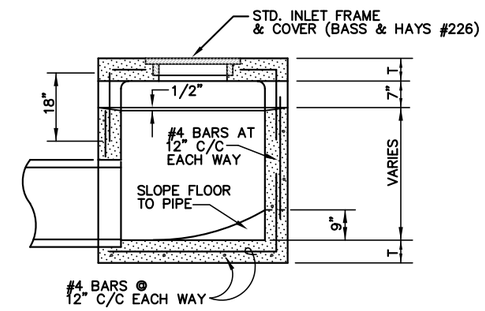

SECTION D - D
N.T.S.

DIMENSIONS FOR DROP INLET				
INLET SIZE	A	B	C	T
2' X 2'	36"	24"	2'	6"
3' X 3'	48"	36"	3'	6"
4' X 4'	60"	48"	4'	6"

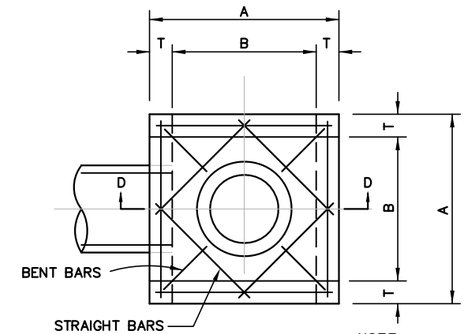

PLAN

NOTE:
ALL REINFORCING IN TOP TO BE #5 BARS @ 6" CENTERS

DROP INLET
N.T.S.

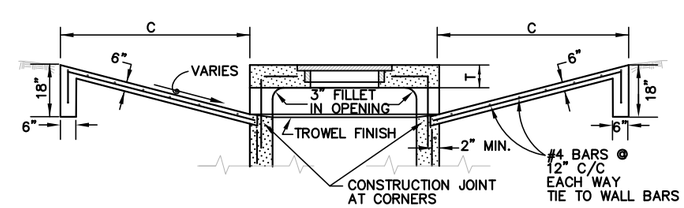

DROP INLET APRON
N.T.S.

* CHAMFER ALL EXPOSED EDGES 3/4"
* WARP APRON TO MATCH FLOWLINES OF INCOMING DITCHES

MANHOLE AND DROP INLET DETAILS		
CITY OF MANSFIELD STANDARD CONSTRUCTION DETAILS		
STORM DRAIN	DATE: NOV. 2014	SHEET NO. SD-2

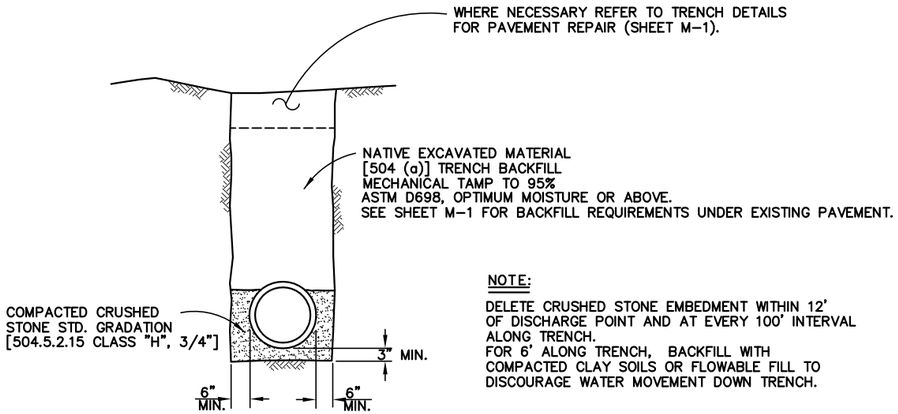

NOTE:

DELETE CRUSHED STONE EMBEDMENT WITHIN 12' OF DISCHARGE POINT AND AT EVERY 100' INTERVAL ALONG TRENCH.
FOR 6' ALONG TRENCH, BACKFILL WITH COMPACTED CLAY SOILS OR FLOWABLE FILL TO DISCOURAGE WATER MOVEMENT DOWN TRENCH.

STORM DRAIN PIPE EMBEDMENT DETAIL

N.T.S.

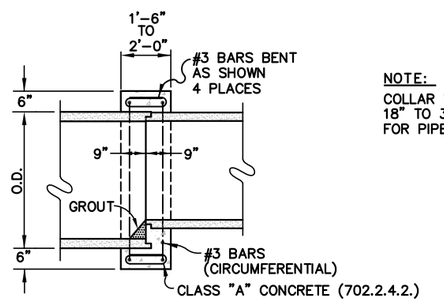

NOTE:

COLLAR WIDTH TO BE MIN. 18" FOR PIPE SIZES 18" TO 30". COLLAR WIDTH TO BE MIN. 24" FOR PIPE SIZES 33" & LARGER.

CONCRETE COLLAR DETAIL

N.T.S.

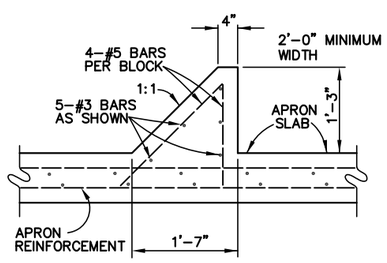

BAFFLE DETAIL AT CULVERT OUTLET

N.T.S.

TRENCH, COLLAR & MISC. DETAILS		
CITY OF MANSFIELD STANDARD CONSTRUCTION DETAILS		
STORM DRAIN	DATE: NOV. 2014	SHEET NO. SD-3

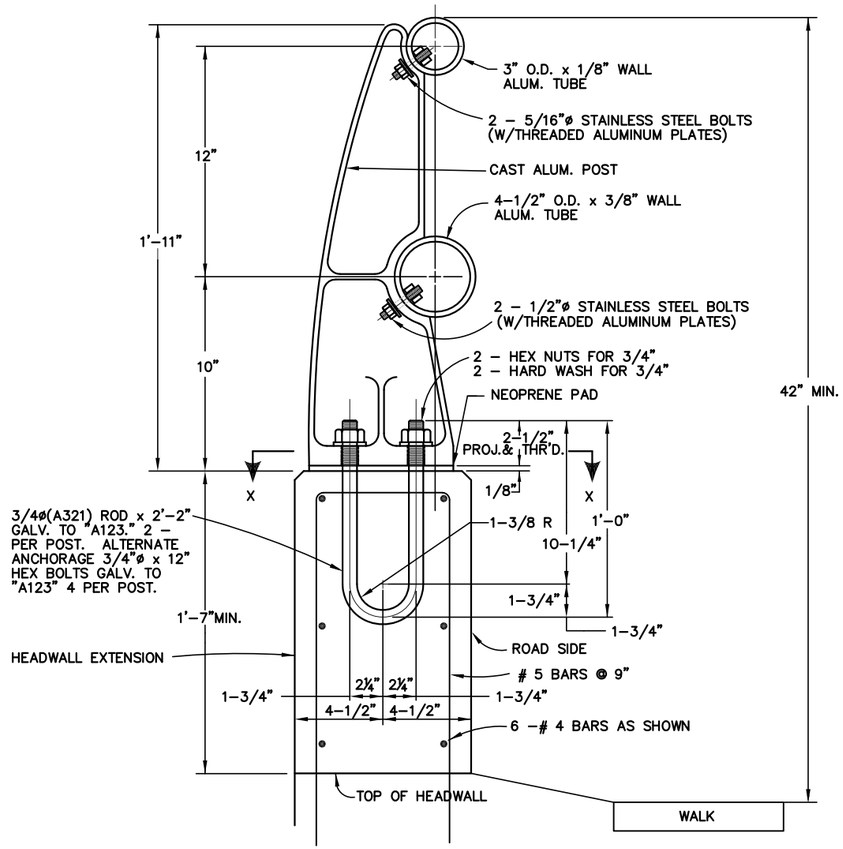

CULVERT RAIL DETAIL

N.T.S.

NOTE: MAX. POST SPACING 8'–4"

* TOP RAIL TO BE MINIMUM 42" ABOVE ADJACENT FINISHED GRADE OR SIDEWALK. USE HEADWALL EXTENSION TO ACHIEVE AS NECESSARY.

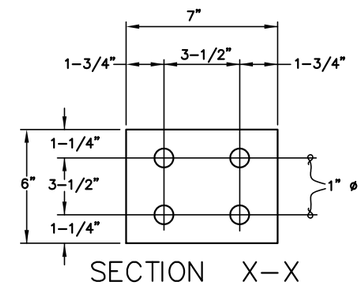

SECTION X–X
NEOPRENE SEAT PAD

N.T.S.

CULVERT RAIL DETAILS		
CITY OF MANSFIELD STANDARD CONSTRUCTION DETAILS		
STORM DRAIN	DATE: NOV. 2014	SHEET NO. SD–4

TABLE OF DIMENSIONS AND QUANTITIES FOR TWO TYPE A HEADWALLS

NO OF PIPES	DIAM. OF PIPES	TABLE OF DIMENSIONS G	K	T	E	H	W	REINF. STEEL FOR TWO HEADWALLS BARS A1 4 ~ #3 Lgth	Wt	BARS A2 #3 @ 18"± No	Lgth	Wt	BARS E 4 ~ #5 Lgth	Wt	BARS F1 @ 12"± No	Size	Lgth	Wt	BARS F2 @ 12"± No	Size	Lgth	Wt	TOTAL QUANTITIES STEEL LBS	CONC CY
1	12"	~	12"	9"	1'-9"	2'-6"	7'-0"	6'-8"	10	8	2'-6"	8	6'-8"	28	12	#4	2'-11"	23	12	#4	3'-8"	29	98	1.48
2	"	10"	"	"	"	"	8'-10"	8'-6"	13	"	"	"	8'-6"	35	14	"	"	27	14	"	"	34	117	1.81
3	"	"	"	"	"	"	10'-8"	10'-4"	16	"	"	"	10'-4"	43	16	"	"	31	16	"	"	39	137	2.15
4	"	"	"	"	"	"	12'-6"	12'-2"	18	"	"	"	12'-2"	51	18	"	"	35	18	"	"	44	156	2.48
1	15"	~	12"	9"	1'-9"	2'-9"	8'-3"	7'-11"	12	8	3'-0"	9	7'-11"	33	12	#4	3'-2"	25	12	#4	3'-11"	31	110	1.82
2	"	1'-0"	"	"	"	"	10'-6"	10'-2"	15	"	"	"	10'-2"	42	14	"	"	30	14	"	"	37	133	2.24
3	"	"	"	"	"	"	12'-9"	12'-5"	19	"	"	"	12'-5"	52	16	"	"	34	16	"	"	42	156	2.66
4	"	"	"	"	"	"	15'-0"	14'-8"	22	"	"	"	14'-8"	61	18	"	"	38	18	"	"	47	177	3.09
1	18"	~	12"	9"	1'-9"	3'-0"	9'-6"	9'-2"	14	8	3'-6"	11	9'-2"	38	20	#4	3'-5"	46	20	#4	4'-2"	56	165	2.19
2	"	1'-2"	"	"	"	"	12'-2"	11'-10"	18	"	"	"	11'-10"	49	22	"	"	50	22	"	"	61	189	2.70
3	"	"	"	"	"	"	14'-10"	14'-6"	22	"	"	"	14'-6"	60	24	"	"	55	24	"	"	67	215	3.21
4	"	"	"	"	"	"	17'-6"	17'-2"	26	"	"	"	17'-2"	72	26	"	"	59	26	"	"	72	240	3.73
1	24"	~	12"	9"	2'-0"	3'-6"	12'-0"	11'-8"	18	8	4'-6"	14	11'-8"	49	24	#4	3'-11"	63	24	#4	4'-11"	79	223	3.17
2	"	1'-5"	"	"	"	"	15'-5"	15'-1"	23	"	"	"	15'-1"	63	26	"	"	68	26	"	"	85	253	3.89
3	"	"	"	"	"	"	18'-10"	18'-6"	28	"	"	"	18'-6"	77	28	"	"	73	28	"	"	92	284	4.62
4	"	"	"	"	"	"	22'-3"	21'-11"	33	"	"	"	21'-11"	91	30	"	"	79	30	"	"	99	316	5.35
1	30"	~	12"	9"	2'-3"	4'-0"	14'-6"	14'-2"	21	16	5'-6"	33	14'-2"	59	28	#4	4'-5"	83	28	#4	5'-8"	106	302	4.31
2	"	1'-8"	"	"	"	"	18'-8"	18'-4"	28	"	"	"	18'-4"	76	32	"	"	94	32	"	"	121	352	5.28
3	"	"	"	"	"	"	22'-10"	22'-6"	34	"	"	"	22'-6"	94	36	"	"	106	36	"	"	136	403	6.26
4	"	"	"	"	"	"	27'-0"	26'-8"	40	"	"	"	26'-8"	111	40	"	"	118	40	"	"	152	454	7.24
1	36"	~	12"	12"	2'-6"	4'-6"	17'-0"	16'-8"	25	16	6'-6"	39	16'-8"	70	32	#4	5'-2"	111	32	#4	6'-8"	143	388	6.40
2	"	1'-11"	"	"	"	"	21'-11"	21'-7"	32	"	"	"	21'-7"	90	36	"	"	124	36	"	"	160	445	7.89
3	"	"	"	"	"	"	26'-10"	26'-6"	40	"	"	"	26'-6"	111	40	"	"	138	40	"	"	178	506	9.37
4	"	"	"	"	"	"	31'-9"	31'-5"	47	"	"	"	31'-5"	131	44	"	"	152	44	"	"	196	565	10.85
1	42"	~	12"	12"	2'-9"	5'-0"	19'-6"	19'-2"	29	16	7'-6"	45	19'-2"	80	36	#4	5'-8"	136	36	#4	7'-5"	178	468	8.10
2	"	2'-2"	"	"	"	"	25'-2"	24'-10"	37	"	"	"	24'-10"	104	40	"	"	152	40	"	"	198	536	9.96
3	"	"	"	"	"	"	30'-10"	30'-6"	46	"	"	"	30'-6"	127	44	"	"	167	44	"	"	218	603	11.80
4	"	"	"	"	"	"	36'-6"	36'-2"	54	"	"	"	36'-2"	151	48	"	"	182	48	"	"	238	670	13.68
1	48"	~	15"	12"	3'-0"	5'-9"	23'-0"	22'-8"	34	24	8'-9"	79	22'-8"	95	40	#5	6'-5"	268	40	#5	8'-5"	351	827	10.74
2	"	2'-5"	"	"	"	"	29'-5"	29'-1"	44	"	"	"	29'-1"	121	44	"	"	295	44	"	"	386	925	13.08
3	"	"	"	"	"	"	35'-10"	35'-6"	53	"	"	"	35'-6"	148	48	"	"	321	48	"	"	422	1023	15.43
4	"	"	"	"	"	"	42'-3"	41'-11"	63	"	"	"	41'-11"	175	52	"	"	348	52	"	"	457	1122	17.77
1	54"	~	15"	12"	3'-3"	6'-3"	25'-6"	25'-2"	38	24	9'-9"	88	25'-2"	105	44	#5	6'-11"	318	44	#5	9'-2"	421	970	12.87
2	"	2'-10"	"	"	"	"	32'-10"	32'-6"	49	"	"	"	32'-6"	136	50	"	"	361	50	"	"	478	1112	15.77
3	"	"	"	"	"	"	40'-2"	39'-10"	60	"	"	"	39'-10"	166	56	"	"	404	56	"	"	536	1254	18.66
4	"	"	"	"	"	"	47'-6"	47'-2"	71	"	"	"	47'-2"	197	62	"	"	447	62	"	"	593	1396	21.55
1	60"	~	15"	12"	3'-6"	6'-9"	28'-0"	27'-8"	42	24	10'-9"	97	27'-8"	115	48	#5	7'-5"	371	48	#5	9'-11"	497	1122	15.20
2	"	3'-0"	"	"	"	"	36'-0"	35'-8"	54	"	"	"	35'-8"	149	54	"	"	418	54	"	"	559	1277	18.55
3	"	"	"	"	"	"	44'-0"	43'-8"	66	"	"	"	43'-8"	182	60	"	"	464	60	"	"	621	1430	21.89
4	"	"	"	"	"	"	52'-0"	51'-8"	78	"	"	"	51'-8"	216	66	"	"	511	66	"	"	683	1585	25.24
1	66"	~	15"	12"	3'-9"	7'-3"	30'-6"	30'-2"	45	32	11'-9"	141	30'-2"	126	52	#5	7'-11"	430	52	#5	10'-8"	579	1321	17.72
2	"	3'-1"	"	"	"	"	39'-1"	38'-9"	58	"	"	"	38'-9"	162	58	"	"	479	58	"	"	645	1485	21.49
3	"	"	"	"	"	"	47'-8"	47'-4"	78	"	"	"	47'-4"	198	64	"	"	529	64	"	"	712	1651	25.27
4	"	"	"	"	"	"	56'-3"	55'-11"	84	"	"	"	55'-11"	233	70	"	"	578	70	"	"	779	1815	29.05
1	72"	~	15"	12"	4'-0"	7'-9"	33'-0"	32'-8"	49	32	12'-9"	153	32'-8"	136	56	#5	8'-5"	492	56	#5	11'-5"	667	1497	20.42
2	"	3'-2"	"	"	"	"	42'-2"	41'-10"	63	"	"	"	41'-10"	175	62	"	"	544	62	"	"	738	1673	24.66
3	"	"	"	"	"	"	51'-4"	51'-0"	77	"	"	"	51'-0"	213	68	"	"	597	68	"	"	810	1850	28.89
4	"	"	"	"	"	"	60'-6"	60'-2"	90	"	"	"	60'-2"	251	74	"	"	650	74	"	"	881	2025	33.12

TABLE OF DIMENSIONS AND QUANTITIES FOR TWO TYPE B HEADWALLS

NO OF PIPES	DIAM. OF PIPES	TABLE OF DIMENSIONS G	K	X	H	Y	W	REINFORCING STEEL AND QUANTITIES FOR TWO HEADWALLS BARS A1 – AX #4 @ 12"± No	Av Lgth	Wt	BARS B #3 @ 18"± No	Lgth	Wt	BARS B1 –BX #3 @ 18"± No	Av Lgth	Wt	C=2'-0" #4 @ 12"± No	Wt	BARS D1 – DX #3 @ 12"± No	Av Lgth	Wt	BARS E 8 ~ #5 Lgth	Wt	BARS F No	Size	Lgth	Wt	BARS G 4 ~ #3 Lgth	Wt	BARS S 12 ~ #4 Lgth	Wt	BARS V1 – VX #4 @ 12"± No	Av Lgth	Wt	BARS W 4 ~ #5 Lgth	Wt	TOTAL QUANTITIES STEEL LBS	CONC CY
1	12"	~	12"	2'-4"	2'-0"	1'-0"	2'-4"	2	2'-8"	4	6	2'-6"	6	~	~	~	4	5	~	~	~	2'-0"	17	8	#4	2'-2"	12	2'-8"	4	8"	5	4	2'-11"	8	1'-8"	7	68	0.52
2	"	10"	"	4'-2"	"	"	4'-2"	"	4'-6"	6	8	"	8	~	~	~	"	"	~	~	~	3'-10"	32	12	"	"	17	4'-6"	7	"	"	"	"	"	"	"	"	95	0.82
3	"	"	"	6'-0"	"	"	6'-0"	"	6'-4"	8	10	"	9	~	~	~	"	"	~	~	~	5'-8"	47	16	"	"	23	6'-4"	10	"	"	"	"	"	"	"	"	122	1.11
4	"	"	"	7'-10"	"	"	7'-10"	"	8'-2"	11	12	"	11	~	~	~	"	"	~	~	~	7'-6"	63	20	"	"	29	8'-2"	12	"	"	"	"	"	"	"	"	151	1.40
1	15"	~	12"	2'-7 1/2"	2'-3"	1'-6"	3'-2 1/2"	4	3'-0"	8	6	3'-0"	7	4	1'-10"	3	8	11	~	~		2'-3"	19	8	#4	2'-5"	13	3'-7"	5	1'-3"	10	8	3'-0"	16	2'-3"	9	101	0.75
2	"	1'-0"	"	4'-10 1/2"	"	"	5'-5 1/2"	5	5'-3"	14	8	"	9	"	"	"	"	"	~	~		4'-6"	38	12	"	"	19	5'-10"	9	"	"	"	"	"	"	"	"	138	1.16
3	"	"	"	7'-1 1/2"	"	"	7'-8 1/2"	6	7'-6"	20	10	"	11	"	"	"	"	"	~	~		6'-9"	56	16	"	"	26	8'-1"	12	"	"	"	"	"	"	"	"	174	1.57
4	"	"	"	9'-4 1/2"	"	"	9'-11 1/2"	7	9'-9"	26	14	"	16	"	"	"	"	"	~	~		9'-0"	75	20	"	"	32	10'-4"	16	"	"	"	"	"	"	"	"	214	1.98
1	18"	~	12"	2'-11"	2'-6"	2'-0"	4'-0 7/8"	4	3'-10"	10	6	3'-6"	8	4	1'-10"	3	8	11	4	1'-0"	2	2'-7"	22	8	#4	2'-8"	14	4'-5"	7	1'-10"	15	12	3'-2"	25	2'-11"	12	129	1.00
2	"	1'-2"	"	5'-7"	"	"	6'-8 7/8"	5	6'-6"	17	8	"	11	"	"	"	"	"	"	"	"	5'-3"	44	12	"	"	21	7'-1"	11	"	"	"	"	"	"	"	"	172	1.55
3	"	"	"	8'-3"	"	"	9'-4 7/8"	6	9'-2"	25	12	"	16	"	"	"	"	"	"	"	"	7'-11"	66	16	"	"	29	9'-9"	15	"	"	"	"	"	"	"	"	219	2.11
4	"	"	"	10'-11"	"	"	12'-0 7/8"	7	11'-10"	32	16	"	21	"	"	"	"	"	"	"	"	10'-7"	88	20	"	"	36	12'-5"	19	"	"	"	"	"	"	"	"	264	2.65
1	24"	~	12"	3'-6"	3'-0"	3'-0"	5'-9 3/4"	6	5'-0"	20	6	4'-6"	10	4	1'-10"	3	8	11	4	1'-0"	2	3'-2"	26	8	#4	3'-2"	17	6'-2"	9	3'-0"	24	16	3'-5"	37	4'-2"	17	176	1.62
2	"	1'-5"	"	6'-11"	"	"	9'-2 3/4"	7	8'-5"	34	10	"	17	"	"	"	"	"	"	"	"	6'-7"	55	12	"	"	25	9'-7"	14	"	"	"	"	"	"	"	"	239	2.46
3	"	"	"	10'-4"	"	"	12'-7 3/4"	8	11'-10"	47	16	"	27	"	"	"	"	"	"	"	"	9'-10"	82	16	"	"	34	13'-0"	20	"	"	"	"	"	"	"	"	304	3.32
4	"	"	"	13'-9"	"	"	16'-0 3/4"	9	15'-3"	61	20	"	34	"	"	"	"	"	"	"	"	13'-5"	112	20	"	"	42	16'-5"	25	"	"	"	"	"	"	"	"	368	4.18
1	30"	~	12"	4'-1"	3'-6"	4'-0"	7'-6 5/8"	8	6'-2"	33	6	5'-6"	12	8	3'-1"	9	12	16	8	2'-2"	7	3'-9"	31	8	#4	3'-8"	20	7'-11"	12	4'-2"	33	20	3'-8"	49	5'-5"	23	245	2.34
2	"	1'-8"	"	8'-3"	"	"	11'-8 5/8"	9	10'-4"	55	12	"	25	"	"	"	"	"	"	"	"	7'-11"	66	16	"	"	39	12'-1"	18	"	"	"	"	"	"	"	"	340	3.58
3	"	"	"	12'-5"	"	"	15'-10 5/8"	9	14'-6"	77	18	"	37	"	"	"	"	"	"	"	"	12'-1"	101	24	"	"	59	16'-3"	24	"	"	"	"	"	"	"	"	435	4.80
4	"	"	"	16'-7"	"	"	20'-0 5/8"	9	18'-8"	100	24	"	50	"	"	"	"	"	"	"	"	16'-3"	136	32	"	"	78	20'-5"	31	"	"	"	"	"	"	"	"	532	6.04
1	36"	~	12"	4'-8"	4'-0"	5'-0"	9'-3 1/2"	10	7'-4"	49	8	6'-6"	20	8	3'-1"	9	12	16	8	2'-2"	7	4'-4"	36	8	#4	4'-2"	22	9'-8"	15	5'-4"	43	24	3'-11"	63	6'-8"	28	308	3.23
2	"	1'-11"	"	9'-7"	"	"	14'-2 1/2"	11	12'-3"	82	14	"	34	"	"	"	"	"	"	"	"	9'-3"	77	16	"	"	45	14'-7"	22	"	"	"	"	"	"	"	"	426	4.89
3	"	"	"	14'-6"	"	"	19'-1 1/2"	12	17'-2"	115	20	"	49	"	"	"	"	"	"	"	"	14'-2"	118	24	"	"	67	19'-6"	29	"	"	"	"	"	"	"	"	544	6.55
4	"	"	"	19'-5"	"	"	24'-0 1/2"	12	22'-1"	147	28	"	68	"	"	"	"	"	"	"	"	19'-1"	159	32	"	"	89	24'-5"	37	"	"	"	"	"	"	"	"	666	8.22
1	42"	~	12"	5'-3"	4'-6"	6'-0"	11'-0 1/4"	12	8'-6"	68	8	7'-6"	23	12	4'-5"	20	16	21	12	3'-3"	15	4'-11"	41	8	#4	4'-8"	25	11'-5"	17	6'-5"	51	28	4'-2"	78	7'-11"	33	392	4.23
2	"	2'-2"	"	10'-11"	"	"	16'-8 1/4"	13	14'-2"	114	16	"	45	"	"	"	"	"	"	"	"	10'-7"	88	16	"	"	50	17'-1"	26	"	"	"	"	"	"	"	"	541	6.40
3	"	"	"	16'-7"	"	"	22'-4 1/4"	13	19'-10"	159	24	"	68	"	"	"	"	"	"	"	"	16'-3"	136	24	"	"	75	22'-9"	34	"	"	"	"	"	"	"	"	690	8.56
4	"	"	"	22'-3"	"	"	28'-0 1/4"	14	25'-6"	204	32	"	90	"	"	"	"	"	"	"	"	21'-11"	183	32	"	"	100	28'-5"	43	"	"	"	"	"	"	"	"	838	10.74
1	48"	~	15"	5'-10"	5'-3"	7'-0"	12'-9 1/8"	14	9'-8"	90	10	8'-6"	32	12	4'-5"	20	16	21	12	3'-4"	15	5'-6"	46	8	#5	5'-5"	45	13'-2"	20	7'-7"	61	32	4'-5"	94	9'-3"	39	483	5.43
2	"	2'-5"	"	12'-3"	"	"	19'-2 1/8"	15	16'-1"	150	18	"	58	"	"	"	"	"	"	"	"	11'-11"	99	16	"	"	90	19'-7"	29	"	"	"	"	"	"	"	"	676	8.25
3	"	"	"	18'-8"	"	"	25'-7 1/8"	16	22'-6"	210	26	"	83	"	"	"	"	"	"	"	"	18'-4"	153	24	"	"	136	26'-0"	39	"	"	"	"	"	"	"	"	871	11.07
4	"	"	"	25'-1"	"	"	32'-0 1/8"	17	28'-11"	270	36	"	115	"	"	"	"	"	"	"	"	24'-9"	207	32	"	"	178	32'-5"	49	"	"	"	"	"	"	"	"	1072	13.89
1	54"	~	15"	6'-5"	5'-9"	8'-0"	14'-6"	16	10'-10"	116	10	9'-6"	36	12	4'-5"	20	20	27	16	4'-5"	27	6'-1"	51	8	#5	5'-11"	49	14'-10"	22	8'-9"	70	40	4'-8"	125	10'-5"	43	586	6.71
2	"	2'-10"	"	13'-9"	"	"	21'-10"	17	18'-2"	194	20	"	71	"	"	"	"	"	"	"	"	13'-5"	112	20	"	"	123	22'-2"	33	"	"	"	"	"	"	"	"	845	10.28
3	"	"	"	21'-1"	"	"	29'-2"	18	25'-6"	273	30	"	107	"	"	"	"	"	"	"	"	20'-9"	173	32	"	"	198	29'-6"	44	"	"	"	"	"	"	"	"	1107	13.84
4	"	"	"	28'-5"	"	"	36'-6"	18	32'-10"	351	40	"	143	"	"	"	"	"	"	"	"	28'-1"	234	44	"	"	272	36'-10"	55	"	"	"	"	"	"	"	"	1367	17.42
1	60"	~	15"	7'-0"	6'-3"	9'-0"	16'-2 7/8"	18	12'-0"	144	10	10'-6"	39	16	5'-9"	35	20	27	16	4'-5"	27	6'-8"	56	8	#5	6'-5"	54	16'-7"	25	9'-11"	80	44	4'-11"	145	11'-8"	49	681	8.11
2	"	3'-0"	"	15'-0"	"	"	24'-2 7/8"	19	20'-0"	240	22	"	87	"	"	"	"	"	"	"	"	14'-8"	122	20	"	"	134	25'-7"	38	"	"	"	"	"	"	"	"	984	12.34
3	"	"	"	23'-0"	"	"	32'-2 7/8"	20	28'-0"	337	32	"	126	"	"	"	"	"	"	"	"	22'-8"	189	32	"	"	214	32'-7"	49	"	"	"	"	"	"	"	"	1278	16.57
4	"	"	"	31'-0"	"	"	40'-2 7/8"	21	36'-5"	438	44	"	174	"	"	"	"	"	"	"	"	30'-8"	256	44	"	"	295	40'-8"	61	"	"	"	"	"	"	"	"	1587	20.82
1	66"	~	15"	7'-7"	6'-9"	10'-0"	17'-11 3/4"	20	13'-2"	176	12	11'-6"	52	16	5'-9"	35	24	32	20	5'-7"	42	7'-3"	60	8	#5	6'-11"	58	18'-4"	28	11'-1"	89	48	5'-2"	166	13'-0"	54	792	9.65
2	"	3'-1"	"	16'-2"	"	"	26'-6 3/4"	21	21'-9"	291	24	"	104	"	"	"	"	"	"	"	"	15'-10"	132	20	"	"	144	26'-11"	40	"	"	"	"	"	"	"	"	1129	14.54
3	"	"	"	24'-9"	"	"	35'-1 3/4"	22	30'-4"	405	34	"	147	"	"	"	"	"	"	"	"	24'-5"	204	32	"	"	231	35'-6"	53	"	"	"	"	"	"	"	"	1458	19.42
4	"	"	"	33'-4"	"	"	43'-8 3/4"	23	39'-8"	530	46	"	199	"	"	"	"	"	"	"	"	33'-0"	275	44	"	"	318	44'-2"	67	"	"	"	"	"	"	"	"	1807	24.31
1	72"	~	15"	8'-2"	7'-3"	11'-0"	19'-8 5/8"	22	14'-4"	211	12	12'-6"	56	16	5'-9"	35	24	32	20	5'-7"	42	7'-10"	65	8	#5	7'-5"	62	20'-1"	30	12'-3"	98	52	5'-5"	188	14'-3"	59	878	11.32
2	"	3'-2"	"	17'-4"	"	"	28'-10 5/8"	23	23'-6"	345	24	"	113	"	"	"	"	"	"	"	"	17'-0"	142	20	"	"	155	29'-3"	44	"	"	"	"	"	"	"	"	1253	16.91
3	"	"	"	26'-6"	"	"	38'-0 5/8"	24	32'-10"	482	38	"	179	"	"	"	"	"	"	"	"	26'-2"	218	32	"	"	248	38'-5"	58	"	"	"	"	"	"	"	"	1639	22.52
4	"	"	"	35'-8"	"	"	47'-2 5/8"	25	41'-10"	615	50	"	235	"	"	"	"	"	"	"	"	35'-4"	295	44	"	"	341	47'-8"	72	"	"	"	"	"	"	"	"	2017	28.11

GENERAL NOTES:

1. ALL EXPOSED CORNERS SHALL BE CHAMFERED ¾".
2. REINFORCING STEEL SHALL BE PLACED WITH THE CENTER OF THE OUTSIDE LAYER OF BARS 2" FROM THE SURFACE OF THE CONCRETE. TOTAL QUANTITIES INCLUDE ONE 30 DIAMETER LAP FOR ALL BARS OVER 60'-0" IN LENGTH.
3. SEE SHEET SD-6, NOTE 1 FOR CONCRETE REQUIRIMENTS.
4. PRE-CAST HEADWALLS WILL NOT BE ALLOWED FOR PIPE SIZES LARGER THAN 30" FOR PUBLIC USE.

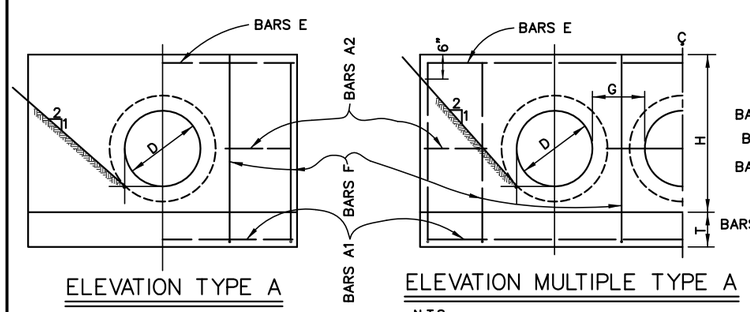

ELEVATION TYPE A
N.T.S.

ELEVATION MULTIPLE TYPE A
N.T.S.

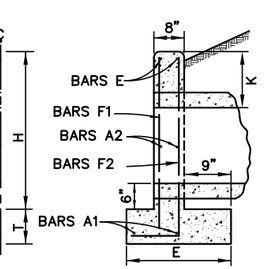

CENTERLINE SECTION
N.T.S.

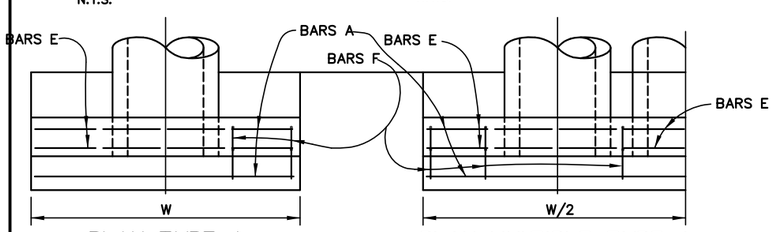

PLAN TYPE A
N.T.S.

PLAN MULTIPLE TYPE A
N.T.S.

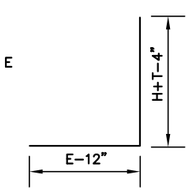

BARS F_2
N.T.S.

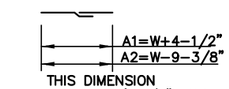

THIS DIMENSION REDUCED 1'-7/8" FOR EACH SUCCESSIVE BAR.

BARS $A_1 - A_x$
N.T.S.

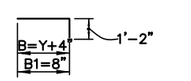

THIS DIMENSION INCREASED 2'-7" FOR EACH SUCCESSIVE BAR.

BARS $B\&B_1 - B_x$
N.T.S.

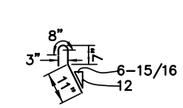

BARS C
N.T.S.

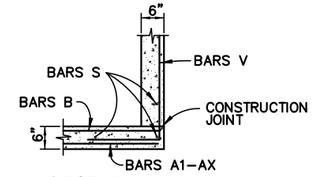

SECTION A – A
N.T.S.

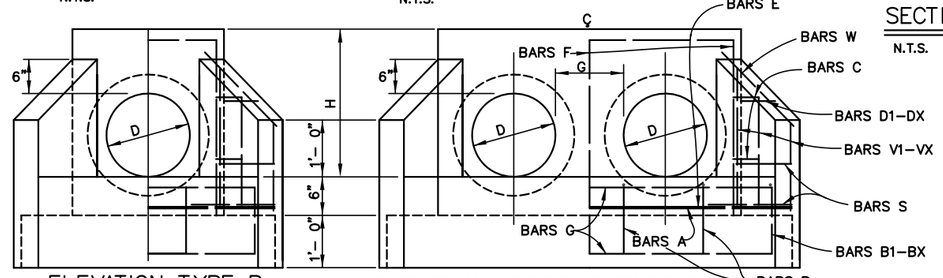

ELEVATION TYPE B
N.T.S.

ELEVATION MULTIPLE TYPE B
N.T.S.

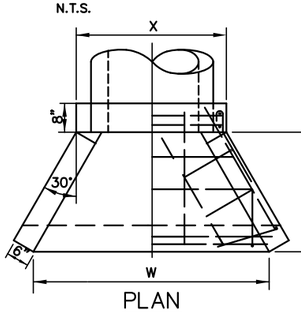

PLAN
N.T.S.

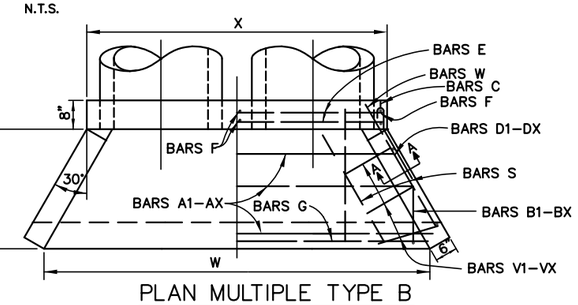

PLAN MULTIPLE TYPE B
N.T.S.

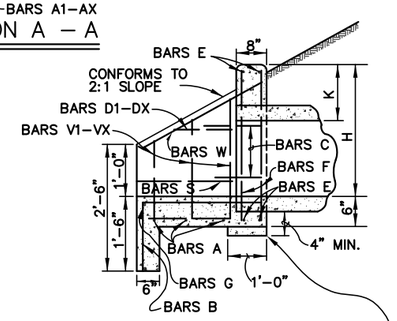

PROVIDE A 12" FOOTING AS SHOWN WHERE REQUIRED TO MAINTAIN 4" MIN. COVER FOR PIPES. CONCRETE FOR FOOTING SHALL BE ADDED TO QUANTITIES SHOWN.

TYPICAL WING ELEVATION
N.T.S.

* CONCRETE QUANTITIES INCREASE SLIGHTLY FOR METAL PIPE INSTALLATIONS.

TYPE "A" & "B" HEADWALLS		
CITY OF MANSFIELD STANDARD CONSTRUCTION DETAILS		
STORM DRAIN	DATE: NOV. 2014	SHEET NO. SD-5

GENERAL NOTES:

1. ALL CONCRETE SHALL BE CLASS "C" (6 SACK, 3600 PSI) (702.2.4.2).
   AGGREGATE SHALL BE 100% CRUSHED ANGULAR STONE (1" MAX.). ALL CONCRET PLACED SHALL CONTAIN SUFFICIENT AIR ENTRAINING AGENT TO YIELD 5% AIR CONTENT.
   ALL OTHER AD MIXTURES SHALL REQUIRE THE PERMISSION OF THE ENGINEERING DEPARTMENT.
2. 3:1 SLOPE IS TYPICAL.

** BASED ON 6" DROP AT END OF PIPE.

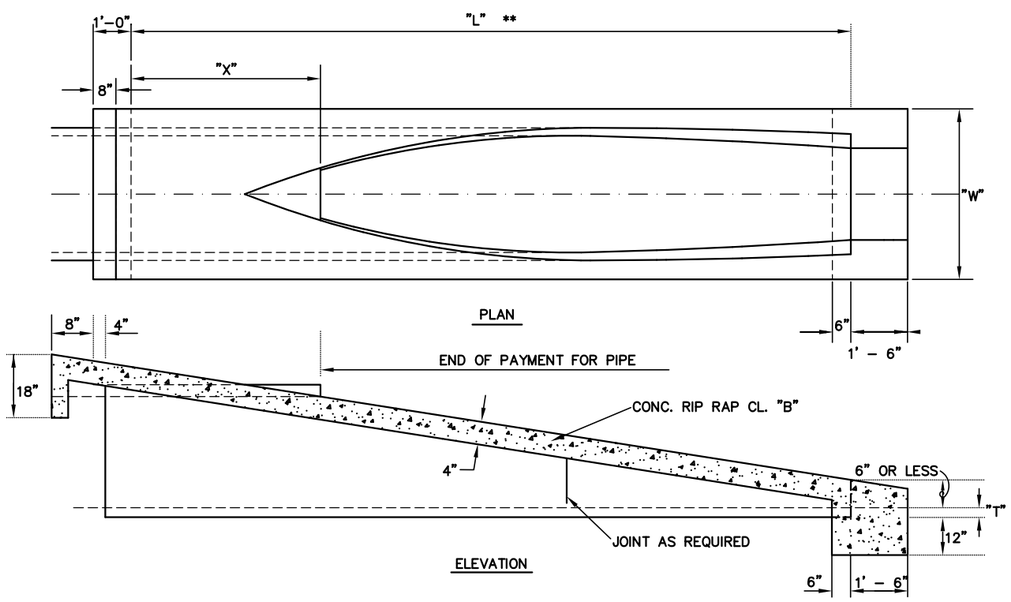

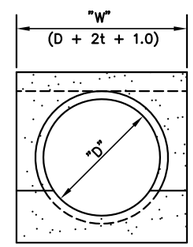

SLOPED CONCRETE PIPE

N.T.S.

OPTION ONE

"D"	SLOPE	"T" *	"W" (MIN.)	"L"	"X"
18"	3:1	2-1/4"	2' 10-1/2"	5' 3-3/4"	1' - 9"
18"	4:1	2-1/4"	2' 10-1/2"	7' - 9"	3' - 0"
18"	6:1	2-1/4"	2' 10-1/2"	10' 1-1/2"	3' - 0"
21"	3:1	2-1/2"	3' - 2"	5' - 9"	1' 4-1/2"
21"	4:1	2-1/2'	3' - 2"	8' - 4"	2' - 6"
21"	6:1	2-1/2'	3' - 2"	11' - 0"	2' - 3"
24"	3:1	3"	3' - 6"	7' - 6"	3' - 0"
24"	4:1	3"	3' - 6"	8' - 0"	2' - 0"
24"	6:1	3"	3' - 6"	12' - 0"	3' - 0"
27"	3:1	3-1/4"	3' 9-1/2"	7' 10-1/2"	2' 7-1/2"
27"	4:1	3-1/4'	3' 9-1/2"	10' - 0"	3' - 0"
27"	6:1	3-1/4'	3' 9-1/2"	15' - 0"	4' - 6"
30"	3:1	3-1/2"	4' - 1"	8' - 3"	2' - 3"
30"	4:1	3-1/2"	4' - 1"	10' - 6"	2' - 6"
30"	6:1	3-1/2"	4' - 1"	15' - 9"	3' - 9"

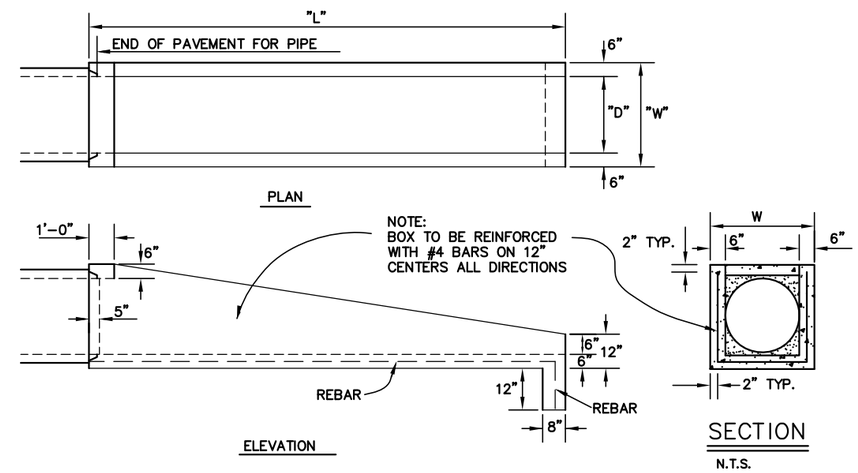

SLOPED CONCRETE BOX

N.T.S.

OPTION TWO

"D"	SLOPE	"W"	"L"
18"	3:1	2'-6"	4'6-3/4"
18"	4:1	2'-6"	5'-9"
18"	6:1	2'-6"	8'1-1/2"
21"	3:1	2'-9"	5'4-1/2"
21"	4:1	2'-9"	6'-10"
21"	6:1	2'-9"	9'-9"
24"	3:1	3'-0"	6'-3"
24"	4:1	3'-0"	8'-0"
24"	6:1	3'-0"	11'-6"
27"	3:1	3'-3"	7'0-3/4"
27"	4:1	3'-3"	9'-1"
27"	6:1	3'-3"	13'1-1/2"
30"	3:1	3'-6"	7'10-1/2"
30"	4:1	3'-6"	10'-2"
30"	6:1	3'-6"	14'-9"

TYPE "P" HEADWALLS		
CITY OF MANSFIELD STANDARD CONSTRUCTION DETAILS		
STORM DRAIN	DATE: NOV. 2014	SHEET NO. SD-6

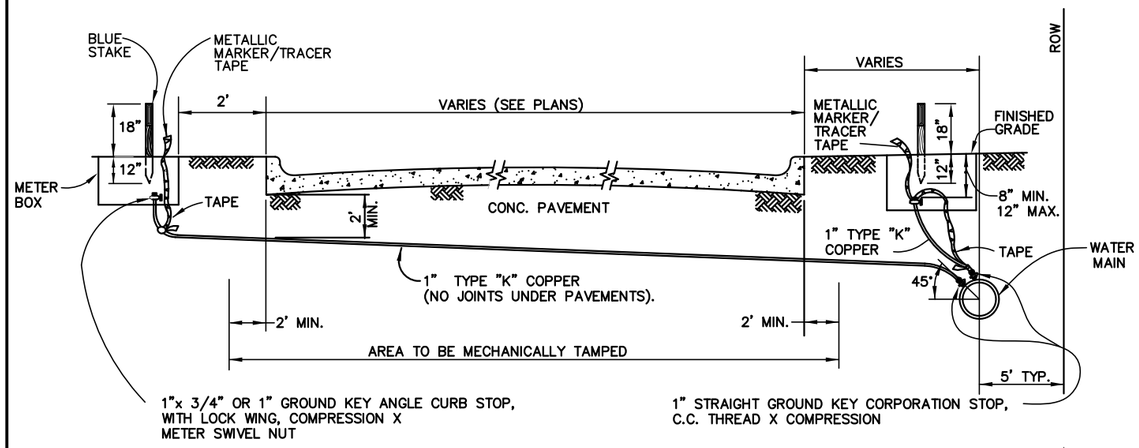

1" WATER SERVICE DETAIL

N.T.S. (TO BE USED FOR 3/4" & 1" METER, SEE NOTE 15)

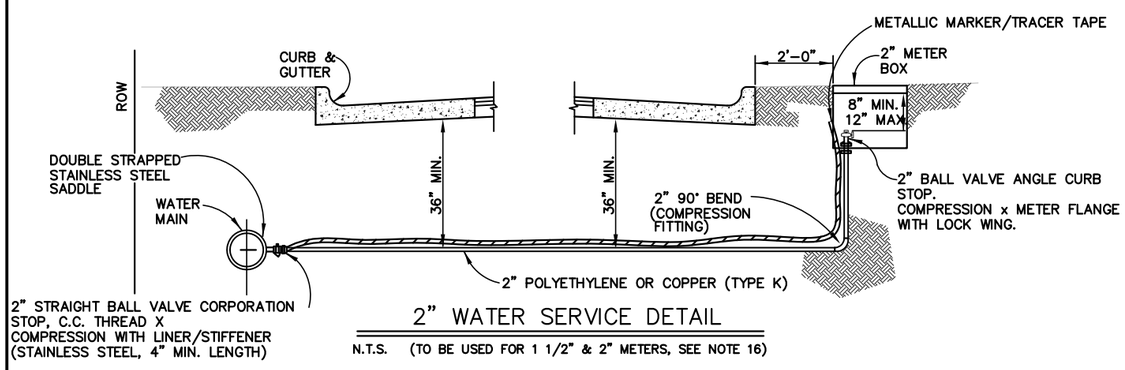

2" WATER SERVICE DETAIL

N.T.S. (TO BE USED FOR 1 1/2" & 2" METERS, SEE NOTE 16)

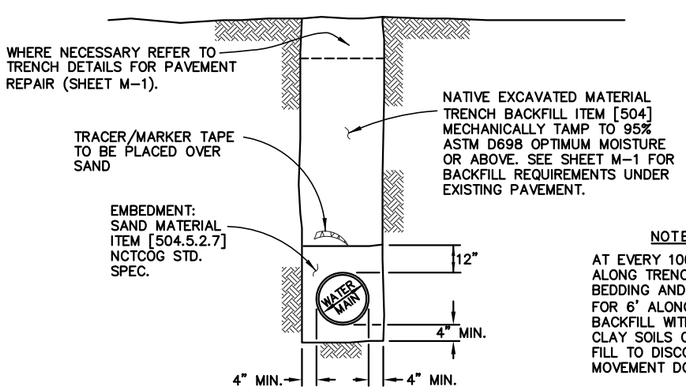

NOTE:

AT EVERY 100' INTERVAL ALONG TRENCH, DELETE BEDDING AND EMBEDMENT FOR 6' ALONG TRENCH. BACKFILL WITH COMPACTED CLAY SOILS OR FLOWABLE FILL TO DISCOURAGE WATER MOVEMENT DOWN TRENCH.

WATER MAIN PIPE TYPICAL EMBEDMENT DETAIL

N.T.S.

GENERAL NOTES:

1. ALL CONSTRUCTION MATERIALS, METHODS, AND PLACEMENTS NOT DETAILED BELOW SHALL MEET OR EXCEED THE STANDARD SPECIFICATIONS OF THE NORTH CENTRAL TEXAS COUNCIL OF GOVERNMENTS, OCTOBER 2004 EDITION, UNLESS SUPERSEDED BY CITY OF MANSFIELD STANDARD SPECIFICATIONS OR MATERIAL TESTING POLICIES.
2. ALL WATER MAINS TO BE P.V.C. AWWA C-900, CLASS 150, DR-18 INSTALLED W/METALLIC MARKER TAPE LABELED "WATERLINE BELOW".
3. BEVELED END OF PIPE WILL BE REMOVED WHEN USED IN MJ FITTING.
4. ALL FITTINGS TO BE MJ UNLESS OTHERWISE NOTED. ALL VERTICAL BENDS TO BE RESTRAINED W/RETAINER GLANDS. HORIZONTAL BENDS OR FITTINGS TO BE RESTRAINED AS NEEDED PER ENGINEER/INSPECTOR.
5. ALL 10" AND SMALLER WATER MAINS WILL BE HELD TO A MINIMUM COVER OF 42" UNLESS OTHERWISE BE SET BY THE ENGINEERING DEPARTMENT. 12" MAINS AND LARGER SHALL FOLLOW PLAN GRADE & PROFILE OF APPROVED CONSTRUCTION PLAN.
6. SERVICE LOCATION SHALL BE STAKED BY SURVEYOR PRIOR TO THE INSTALLATION OF ANY WATER SERVICES, SEWER SERVICES, AND/OR METER BOXES.
7. STORAGE: P.V.C. WATER PIPE IS ALLOWED TO BE STORED A MAXIMUM OF SIX (6) MONTHS WITHOUT COVER. THEREAFTER ALL PIPES SHOULD BE COVERED OR KEPT AWAY FROM SUN LIGHT AND PROTECTED FROM OTHER ELEMENTS.
8. ALL IRON FITTINGS, INCLUDING FIRE HYDRANTS AND VALVES, SHALL BE POLY WRAPPED.
9. EPOXY COATED TAPPING SADDLES SHALL BE USED. 1" SADDLES WILL HAVE SINGLE STAINLESS STEEL STRAP AND 2" WILL HAVE DOUBLE STAINLESS STEEL STRAP. GASKET ON SADDLE TO BE FLAT, NO O-RINGS WILL BE PERMITTED. O.D. OF SADDLE SHALL NOT BE LARGER THAN O.D. OF PIPE. SADDLE MUST BE POLY-WRAPPED.
10. ALL TAPS LARGER THAN 2" WILL BE MADE USING TAPPING SLEEVES, NOT SADDLES.
11. TAPS WILL BE A MINIMUM OF 2' APART WITH TAPS NO CLOSER THAN 1' TO END OF PIPE. CUTTER FOR TAPS TO BE DOUBLE SLOTTED TYPE.
12. IT IS THE RESPONSIBILITY OF THE DEVELOPER TO FURNISH AND INSTALL METER BOXES AS APPROVED BY THE ENGINEERING DEPARTMENT.
13. METER BOXES WILL NOT BE PERMITTED IN DRIVEWAYS OR SIDEWALKS EXCEPT FOR COMMERCIAL BUILDING METERS AS APPROVED BY ENGINEERING DEPARTMENT. WHEN METER IS ALLOWED IN CONCRETE A TRAFFIC RATED BOX SHALL BE USED AND BOLLARDS TO BE PLACED AROUND METER FOR PROTECTION WHERE DIRECTED BY ENGINEER.
14. METER BOXES SHALL HAVE A 2' MIN. SPACING FROM CURBS, DRIVEWAYS, MAIL BOXES, ETC.
15. ALL ¾" WATER SERVICES SHALL BE MADE BY USING 1" CORPORATION STOP, 1" SADDLE, 1" COPPER, AND 1"X ¾" ANGLE CURB STOP.
16. 1½" WATER SERVICES SHALL BE MADE BY USING ALL 2" PARTS. THE 1½" METER WILL BE SET ON A 2" ANGLE CURB STOP.
17. ALL TAPPING VALVES SHALL BE BLOCKED PRIOR TO MOUNTING TAPPING MACHINE.
18. SIZE ON SIZE TAPS SHALL NOT BE PERMITTED ON AC PIPE.
19. SEE SHEET MS-1 AND MS-2 FOR APPROVED PARTS LIST.
20. ALL WATER SERVICES SHALL HAVE NO JOINTS OR SPLICES UNDER PAVEMENT.

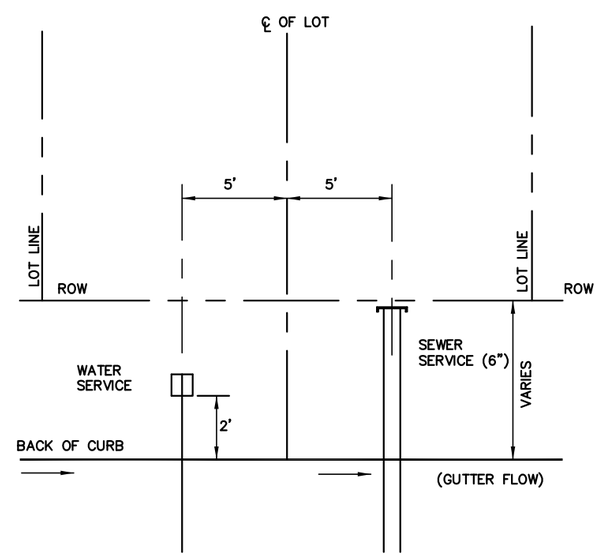

SERVICE LOCATION DETAIL

N.T.S.

WATER SERVICE, GENERAL NOTES, & TRENCH DETAILS		
CITY OF MANSFIELD		
STANDARD CONSTRUCTION DETAILS		
WATER	DATE: NOV. 2014	SHEET NO. W-1

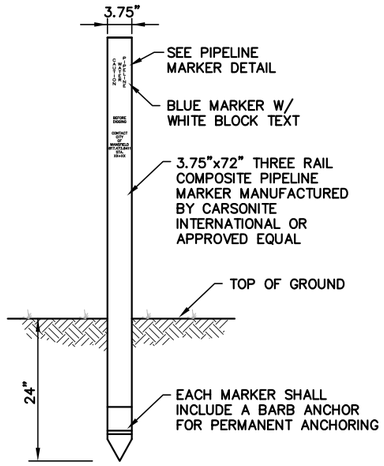

PIPELINE MARKER

N.T.S.

NOTES:

1. MARKER SHALL BE LOCATED ALONG THE PIPELINE AT A 200' INTERVAL AND AT ALL BENDS.
2. EACH MARKER SHALL HAVE A STICKER WITH THE FOLLOWING INFORMATION "CAUTION WATER PIPELINE, CONTACT CITY OF MANSFIELD (817) 473-8411, STA. XX+XX.

PIPELINE MARKER DETAIL

N.T.S.

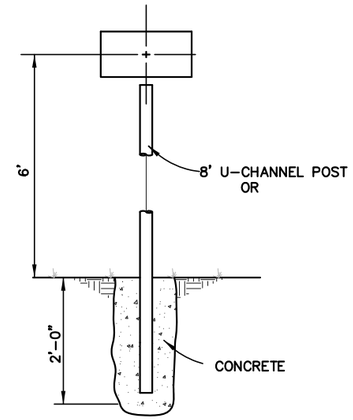

TEST STATION	WATER METER
WATER VALVE	MANHOLE
BLOW OFF	AIR RELEASE

NOTE:

1. MARKERS TO BE INSTALLED IN UNDEVELOPED AREAS OR AS INDICATED ON PLANS OR AS DIRECTED BY INSPECTOR.
2. MARKERS MUST BE PURCHASED FROM UTILITY DEPARTMENT. 817-473-8411.

MARKER INSTALLATION DETAIL

N.T.S.

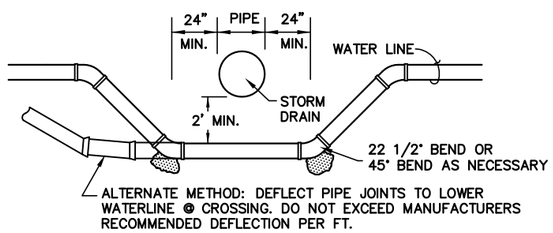

NOTES:

1. REFER TO CONSTRUCTION PLANS FOR TOP OF WATER LINE ELEVATION AT CROSSING.
2. REFER TO CONSTRUCTION PLANS FOR CROSSING DETAILS FOR 12" AND LARGER PIPES.
3. ALL JOINTS TO BE RESTRAINED WITH RETAINER GLANDS.

WATER LINES LOWERING

N.T.S.

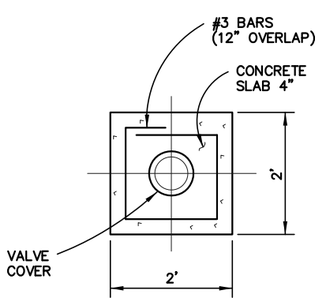

VIEW A-A

N.T.S.

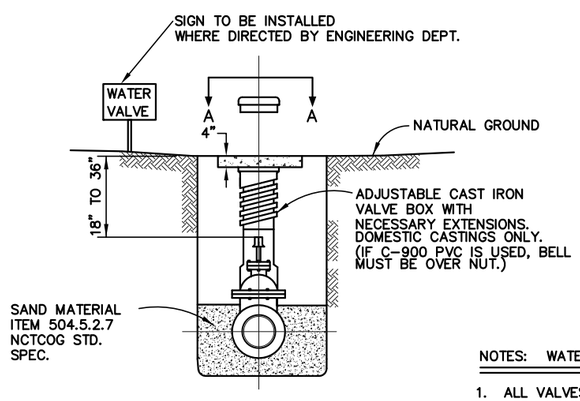

TYPICAL VALVE SETTING AND BOX 4" TO 12" GATE VALVE

N.T.S.

NOTES: WATER VALVE

1. ALL VALVES TO BE RESILIENT SEAT GATE VALVES WITH NON-RISING STEMS, COUNTER- CLOCKWISE OPENING.
2. VALVE STEM EXTENSIONS WITH ROCK GUARDS AND LOCK CLIPS SHALL BE INSTALLED WHERE NECESSARY TO PLACE OPERATING NUT NOT MORE THAN 36" BELOW FINISHED GRADE.

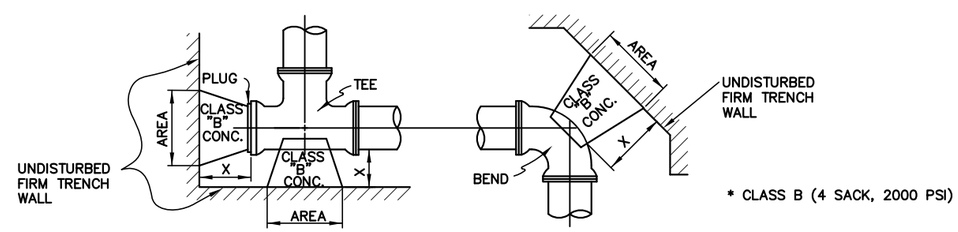

* CLASS B (4 SACK, 2000 PSI)

MINIMUM REQUIRED BEARING AREA IN SQUARE FEET					
PIPE SIZE	PLUGS & TEES	90° BENDS	45° BENDS	22 1/2° BENDS	X
4" &6"	2.2	3.0	1.7	0.9	TO BE A MINIMUM OF 18"
8"	3.8	5.4	2.9	1.5	
10"	5.9	8.4	4.6	2.3	
12"	8.5	12.0	6.5	3.4	

NOTES:

1. THRUST BLOCKS SHALL BE PLACED OR FORMED IN SUCH POSITION THAT ALL BOLTS REMAIN ACCESSIBLE.
2. ALL BLOCKING SHALL BE PLACED AGAINST UNDISTURBED FIRM TRENCH WALL.
3. BLOCKING AREAS SHOWN ABOVE ARE BASED ON 150 PSI PIPE PRESSURE AND MINIMUM SOIL BEARING OF 2000#/S.F.
4. ALL FITTINGS TO BE MJ UNLESS OTHERWISE NOTED. ALL VERTICAL BENDS TO BE RESTRAINED W/RETAINER GLANDS. HORIZONTAL FITTINGS TO BE RESTRAINED AS NEEDED PER ENGINEER OR INSPECTOR.

DIMENSIONS OF CONCRETE FOR THRUST BLOCKS AT FITTINGS

N.T.S.

GATE VALVE, BLOCKING, MARKER, & LOWERING DETAILS		
CITY OF MANSFIELD STANDARD CONSTRUCTION DETAILS		
WATER	DATE: NOV. 2014	SHEET NO. W-2

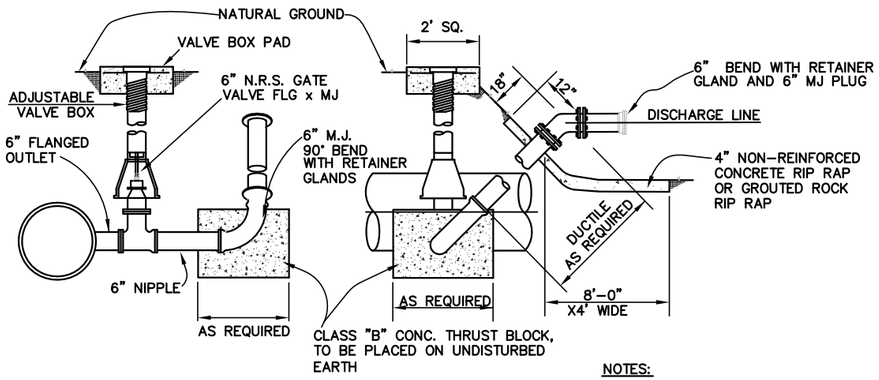

NOTES:

1. MUST BE DISCHARGED INTO STORM SEWER, BRIDGE OR CULVERT.
2. USE APPROPRIATE BEND TO MAKE DISCHARGE END HORIZONTAL.
3. ALL FITTINGS SHALL BE RETAINED & DISCHARGE END SHALL BE CLOSED W/MJ PLUG.

BLOW OFF VALVE DETAIL

N.T.S.

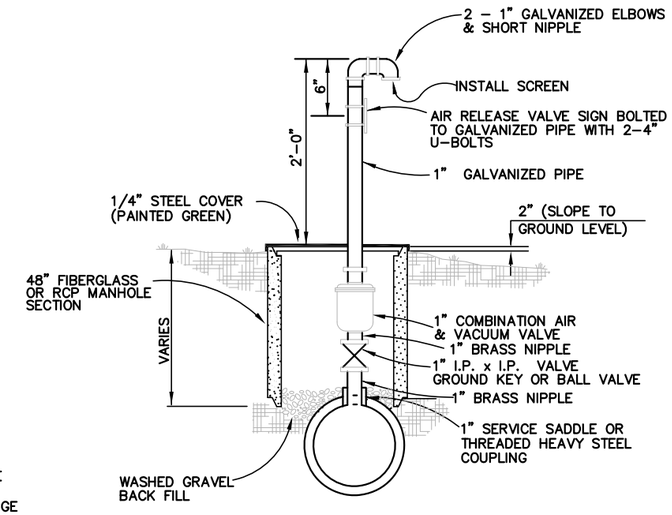

1" AIR AND VACUUM RELEASE VALVE INSTALLATION

N.T.S.

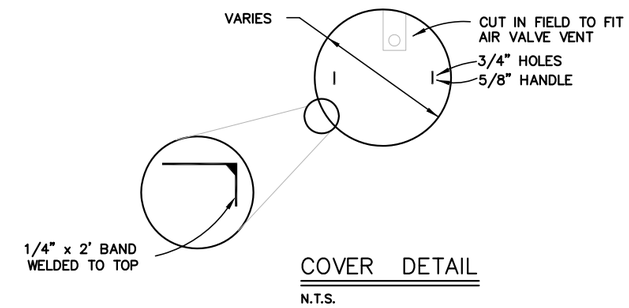

COVER DETAIL

N.T.S.

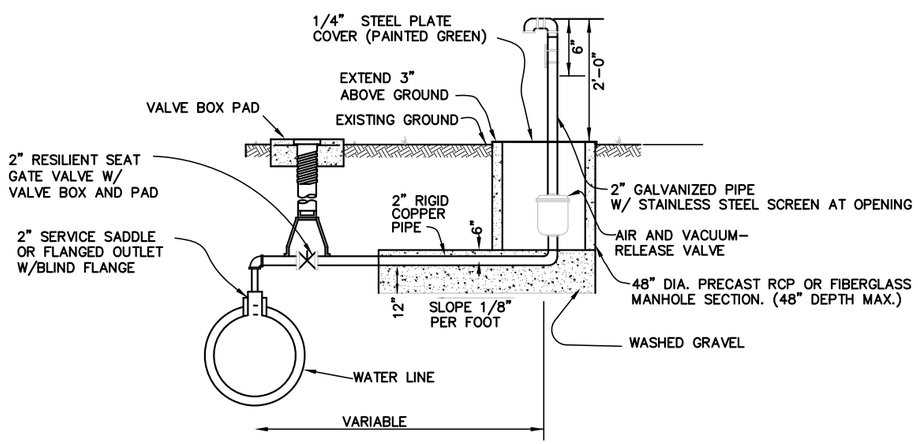

NOTES:

1. COMBINATION AIR AND VACUUM- AIR RELEASE VALVE APCO MODEL 143C OR CLA-VAL SERIES 36 OR AWWA APPROVED EQUAL.
2. USE OF OFFSET OR NON-OFFSET TO BE DETERMINED BY ENGINEER PER FIELD CONDITION.

2" & LARGER OFFSET AIR & VACUUM RELEASE VALVE INSTALLATION

N.T.S.

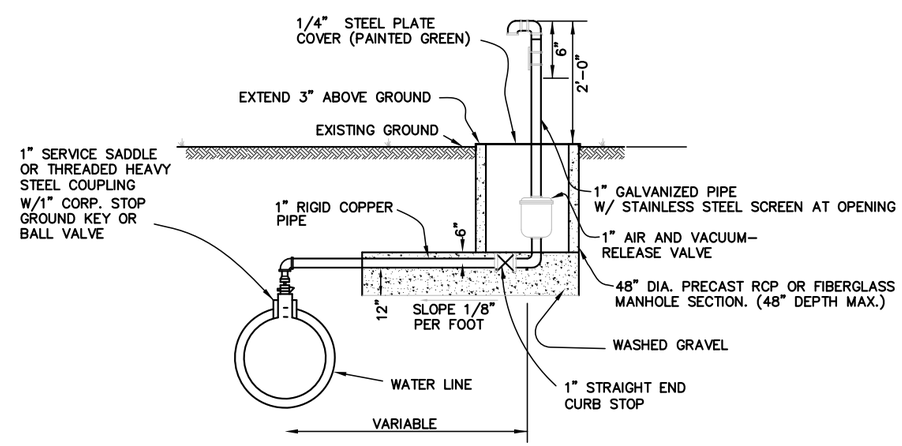

NOTES:

1. COMBINATION AIR AND VACUUM-AIR RELEASE VALVE APCO MODEL 143C OR CLA-VAL SERIES 36 OR AWWA APPROVED EQUAL.
2. USE OF OFFSET OR NON-OFFSET TO BE DETERMINED BY ENGINEER PER FIELD CONDITION.

1" OFFSET AIR AND VACUUM RELEASE RELEASE VALVE INSTALLATION

N.T.S.

BLOW OFF & AIR RELEASE VALVE DETAILS		
CITY OF MANSFIELD STANDARD CONSTRUCTION DETAILS		
WATER	DATE: NOV. 2014	SHEET NO. W-3

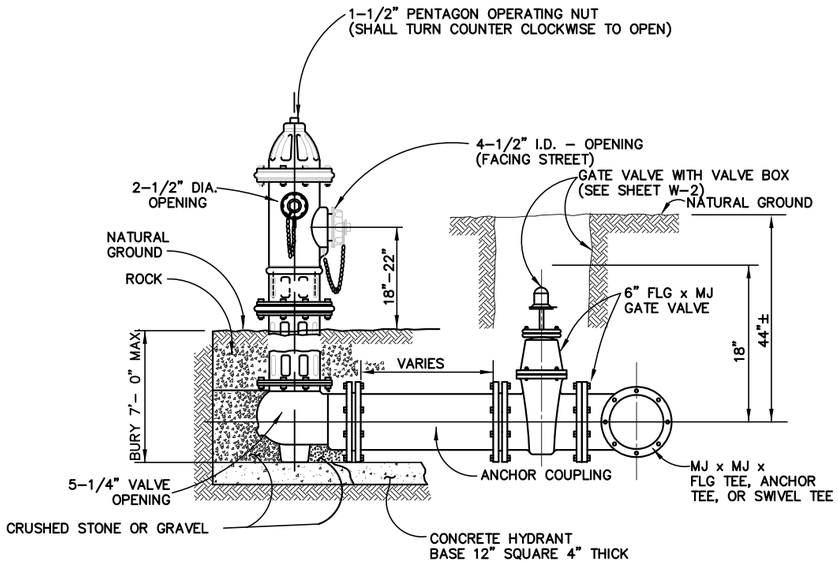

STANDARD FIRE HYDRANT DETAIL

N.T.S.

FIRE HYDRANT NOTES:

1. CENTER OF F.H. BARREL SHALL BE NOT LESS THAN 2.5' OR MORE THAN 3.5' FROM BACK OF CURB OR EDGE OF PAVEMENT, UNLESS OTHERWISE APPROVED BY THE ENGINEERING DEPARTMENT.
2. ON PRIVATE CONTRACTS, THE DEVELOPER'S ENGINEER WILL STAKE F.H. HORIZONTAL LOCATION AND FLANGE ELEVATION.
3. FIRE HYDRANTS SHALL BE INSTALLED PRIMED ONLY, PAINTED AFTER INSTALLATION.
4. FIRE HYDRANTS SHALL BE COATED WITH HYDRANT HYDE, FLYNT, OR TENEMEC BRAND PAINTS. THE COLOR SHALL BE ALUMINUM.
5. HYDRANT LEADS OR FIRE LINES IN EXCESS OF 200' REQUIRE DOUBLE-CHECK ASSEMBLY AT MAIN (SEE SHEET W-6).
6. ALL HYDRANT EXTENSIONS SHALL HAVE BREAKAWAY FLANGE AND STEM COUPLING.
7. BLOCKING OF FIRE HYDRANT SHALL BE REQUIRED FOR EXTENSIONS ACROSS STREETS FROM MAINS OF LEADS LONGER THAN ONE JOINT OF PIPE. LAST JOINT OF PIPE CONNECTING TO HYDRANT MUST BE A FULL JOINT.
8. LOWER BARREL ON FIRE HYDRANT SHALL NOT EXCEED 7'-0". IF NECESSARY, RETAINED BENDS MAY BE USED TO ACHIEVE GRADE NEEDED WITHOUT EXCEEDING 7'-0" LOWER BARREL HEIGHT. ALL PIPING TO BE DUCTILE IRON.
9. PIPE WITH RETAINER GLANDS WILL ONLY BE PERMITTED FOR LEADS THAT EXCEED 36".

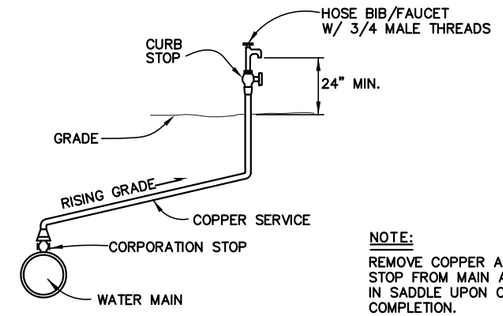

NOTE:
REMOVE COPPER AND CORPORATION STOP FROM MAIN AND INSTALL PLUG IN SADDLE UPON CONSTRUCTION COMPLETION.

TEMPORARY FLUSH VALVE/SAMPLE POINT

N.T.S.

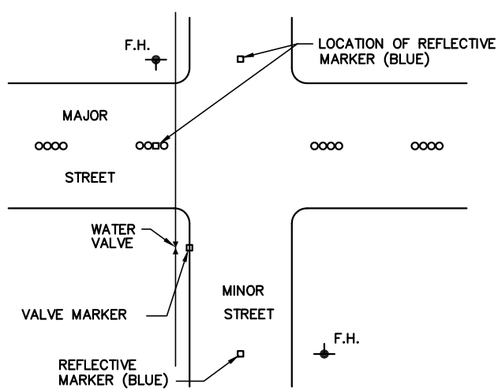

WATER APPURTENANCE MARKERS

NOTES:

1. EACH WATER SYSTEM VALVE LOCATED ADJACENT TO OR IN A CITY STREET SHALL RECEIVE A MARKER PLACED ON THE CURB AS CLOSE AS POSSIBLE TO THE VALVE. VALVES TO BE MARKED BY SAWING A "V" IN FACE OF CURB ADJACENT TO VALVE BOX. VALVES NOT IN STREET MARKED WITH UPSIDE-DOWN "V".
2. EACH LOCATION OF A FIRE HYDRANT SHALL RECEIVE A BLUE REFLECTORIZED MARKER LOCATED IN THE CENTER OF ANY STREET TO WHICH IT IS ADJACENT (2 FOR HYDRANTS ON STREET CORNERS).
3. ALL BLUE FIRE HYDRANT MARKERS SHALL BE A CUBE CORNER TYPE REFLEX REFLECTOR MOLDED OF OPTIC GRADE PLASTIC, WITH A HOUSING OF HIGH IMPACT ABS PLASTIC, WITH A FILLER OF INERT THERMOSETTING RESINS. APEX UNIVERSAL, INC. TYPE: BB TWO WAY BLUE.

NOTE:
FILL VOIDS BETWEEN ENCASEMENT PIPE AND THE SURROUNDING GROUND COMPLETELY WITH GROUT.

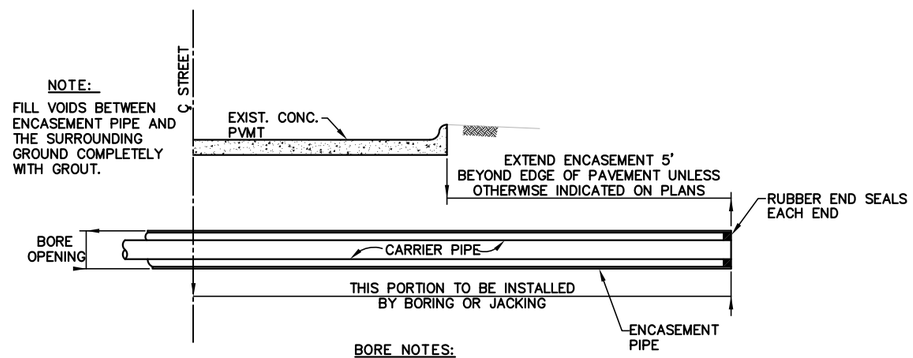

BORE NOTES:

1. ALL BORES SHALL BE CASED. (TYP. 2 NOMINAL SIZES LARGER THAN CARRIER).
2. CASING PIPE SHALL BE COATED INSIDE AND OUTSIDE WITH BITUMINOUS COATING.
3. VOIDS OUTSIDE OF CASING PIPES SHALL BE GROUT FILLED.
4. SEE SHEET MS-2 FOR APPROVED SPACERS.
5. SPACERS TO BE INSTALLED PER MANUFACTURER'S SPECIFICATION.

BORE DETAIL

N.T.S.

FIRE HYDRANT, TEMPORARY FLUSH VALVE, & BORE DETAILS		
CITY OF MANSFIELD STANDARD CONSTRUCTION DETAILS		
WATER	DATE: NOV. 2014	SHEET NO. W-4

GENERAL NOTES:

1. ALL VAULTS W/METER OR BACKFLOW PREVENTERS SHALL BE PRECAST AND DELIVERED WITH ALL INTERNAL PIPING AND PARTS COMPLETE. METER AND BACKFLOW PREVENTER TO BE IN SEPARATE VAULTS.
2. ALL PIPES MUST BE DUCTILE IRON & ALL FITTINGS MUST BE FLANGED IN VAULT.
3. CONCRETE SHALL BE CLASS "F" WITH DESIGN STRENGTH OF 4200 PSI @ 28 DAYS (708.2.4.2). UNIT IS OF MONOLITHIC CONSTRUCTION AT FLOOR AND FIRST STAGE OF WALL WITH SECTIONAL RISER TO REQUIRED DEPTH.
4. GRADE 60 REINFORCED, STEEL REBAR CONFORMING TO ASTM A615 ON REQUIRED CENTERS OR EQUAL.
5. 1/4"ALUMINUM DIAMOND PLATE COVER WITH EXTRUDED ALUMINUM FRAME. HATCH TO BE FURNISHED WITH 316 STAINLESS STEEL SNAP LOCK & STAINLESS HINGES TO BE CENTERED OVER METER.
6. MODEL NUMBER IS FOR PARK EQUIPMENT COMPANY, MODEL IS DMC–MF. UNITS BY OTHER MANUFACTURERS MUST BE SUBMITTED TO BE APPROVED AS EQUALS.

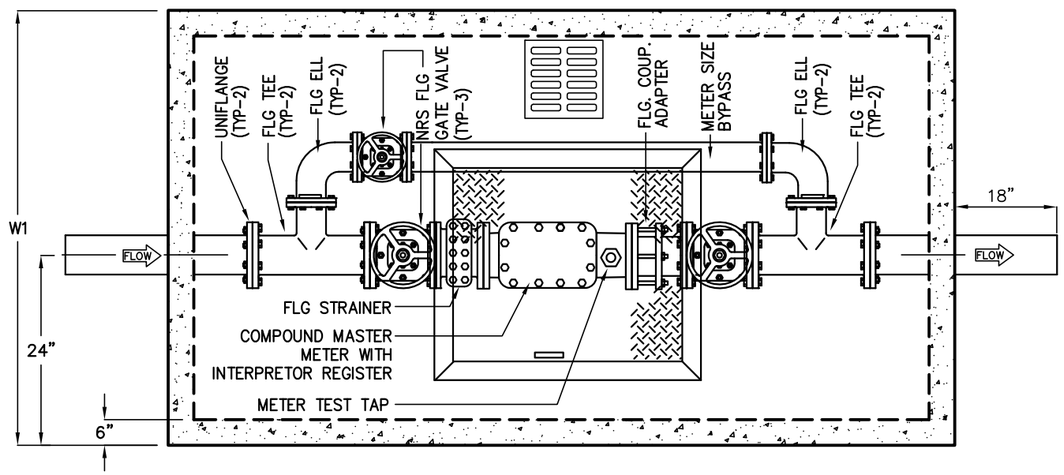

PLAN VIEW

DIMENSIONS						
MODEL	SIZE	BY PASS	L1	W1	H1	WEIGHT LBS
DMC–MF3	3"	3	8'–8"	5'–0"	5'–0"	14,000
DMC–MF4	4"	4"	8'–8"	5'–0"	5'–0"	14,000
DMC–MF6	6"	6"	11'–0"	6'–0"	5'–0"	19,000

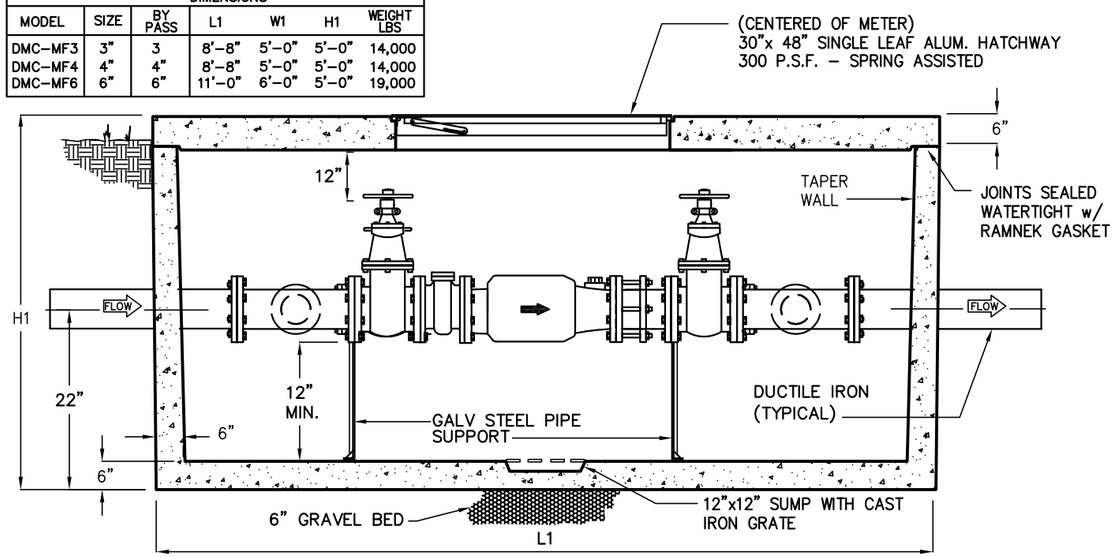

ELEVATION

APPROVED GATE VALVES:
MUELLER, KENNEDY, CLOW
WATEROUS, M & H

3", 4", & 6" DOMESTIC METER

3" & LARGER WATER SERVICE DETAILS		
CITY OF MANSFIELD STANDARD CONSTRUCTION DETAILS		
WATER	DATE: NOV. 2014	SHEET NO. W–5

GENERAL NOTES:

1. ALL BACKFLOW PREVENTER VAULTS SHALL BE PRECAST AND DELIVERED WITH ALL INTERNAL PIPING AND PARTS COMPLETE.
2. ALL PIPE MUST BE DUCTILE IRON & ALL FITTINGS MUST BE FLANGED IN VAULT.
3. CONCRETE SHALL BE CLASS "F" WITH DESIGN STRENGTH OF 4200 PSI @ 28 DAYS (702.2.4.2). UNIT IS OF MONOLITHIC CONSTRUCTION AT FLOOR AND FIRST STAGE OF WALL WITH SECTIONAL RISER TO REQUIRED DEPTH.
4. GRADE 60 REINFORCED, STEEL REBAR CONFORMING TO ASTM A615 ON REQUIRED CENTERS OR EQUAL.
5. ¼"ALUMINUM DIAMOND PLATE COVER WITH EXTRUDED ALUMINUM FRAME. HATCH TO BE FURNISHED WITH 316 STAINLESS STEEL SNAP LOCK & STAINLESS HINGES.
6. BACKFLOW ASSEMBLY SHALL BE FACTORY ASSEMBLED IN VAULT & HYDROSTATICALLY TESTED PRIOR TO DELIVERY.
7. MODEL NUMBERS ARE FOR PARK EQUIPMENT COMPANY, MODELS ARE DDBP-MF (FIRE SERVICE) OR BP-M (DOMESTIC). UNITS BY OTHER MANUFACTURERS MUST BE SUBMITTED TO BE APPROVED AS EQUALS.

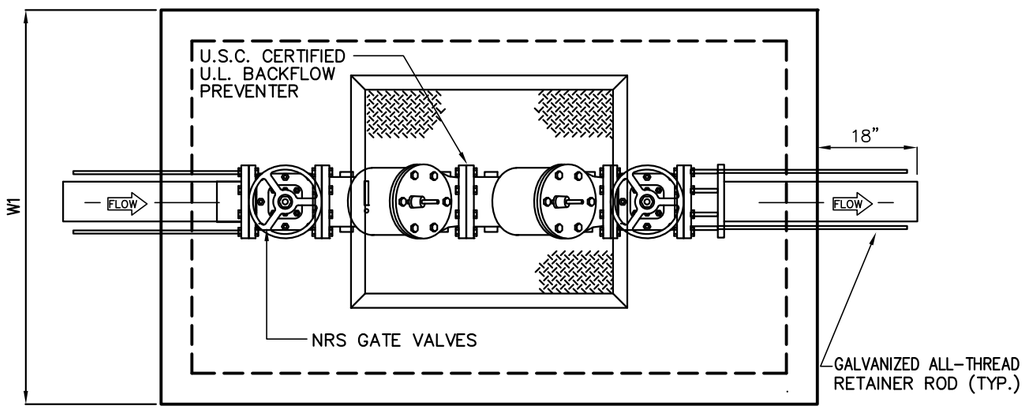

PLAN VIEW

MODEL	SIZE	L1	W1	H1	ALUM. HATCH	WEIGHT LBS
BP-MF3	3"	6'-0"	3'-6"	5'-0"	30X36	6,000
BP-MF4	4"	6'-0"	3'-6"	5'-0"	30X36	6,000
BP-MF6	6"	6'-0"	5'-0"	5'-0"	30X48	9,000
BP-MF8	8"	8'-8"	5'-0"	6'-0"	30X48	15,000
BP-MF10	10"	9'-0"	6'-0"	6'-6"	30X48	18,000

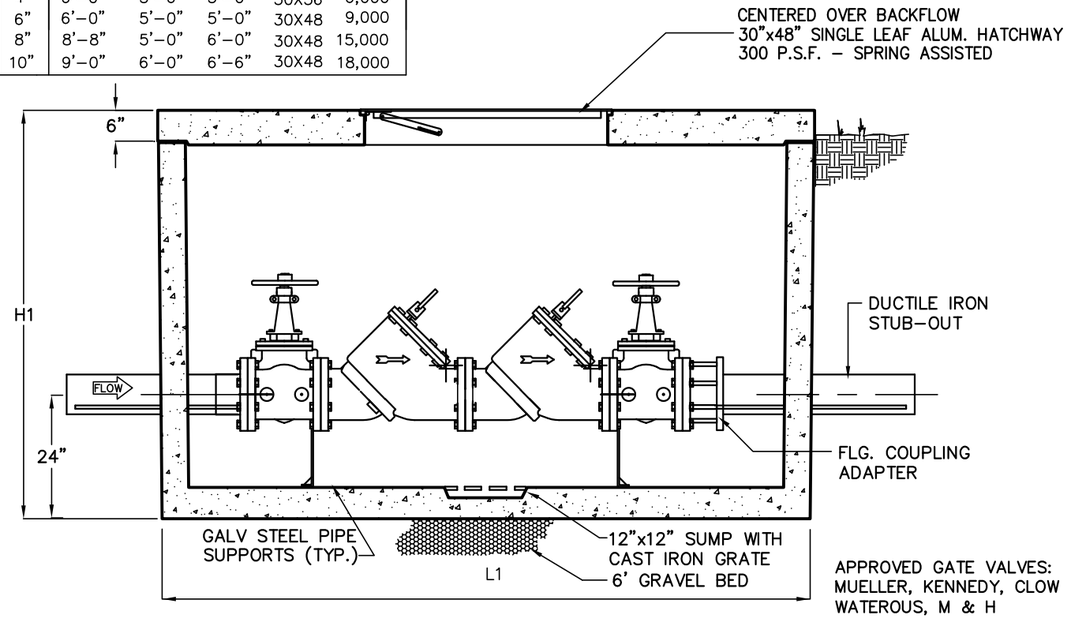

ELEVATION

DOMESTIC DOUBLE-CHECK ASSEMBLY

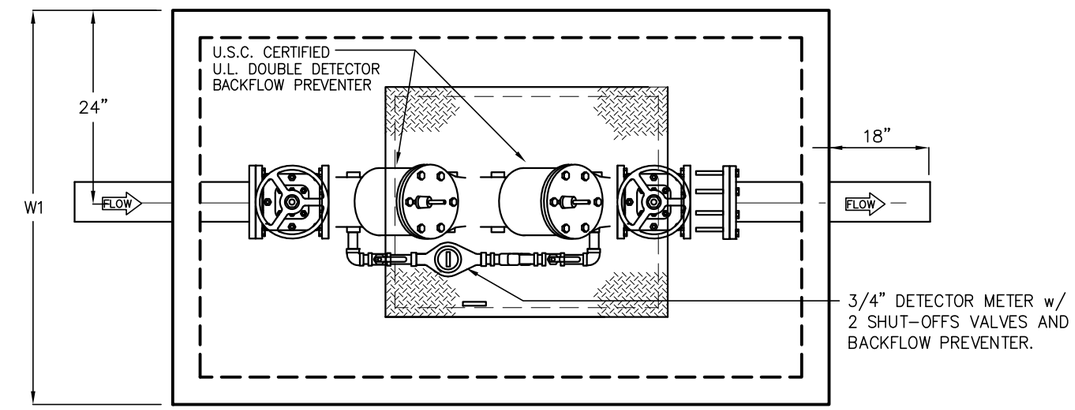

PLAN VIEW

MODEL	SIZE	L1	W1	H1	WEIGHT LBS
DDBP-MF4	4"	6'-0"	5'-0"	6'-0"	9,000
DDBP-MF6	6"	6'-0"	5'-0"	6'-0"	9,200
DDBP-MF8	8"	8'-8"	5'-0"	6'-0"	15,000
DDBP-MF10	10"	9'-0"	6'-0"	7'-0"	18,000

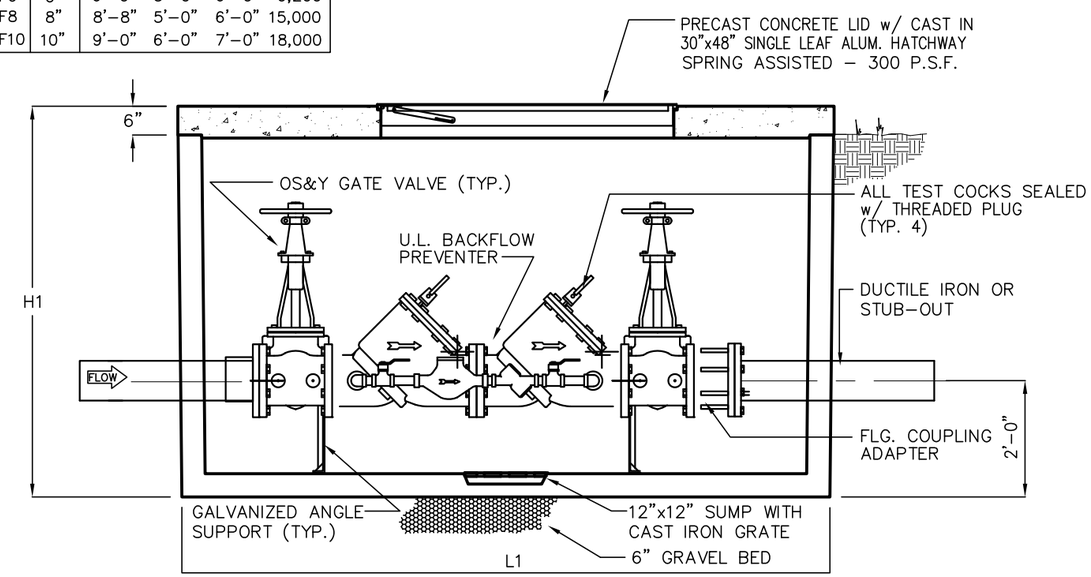

ELEVATION

FIRE SERVICE DETECTOR
DOUBLE-CHECK ASSEMBLY

3" & LARGER BACKFLOW PREVENTION DEVICE DETAILS		
CITY OF MANSFIELD		
STANDARD CONSTRUCTION DETAILS		
WATER	DATE: NOV. 2014	SHEET NO. W-6

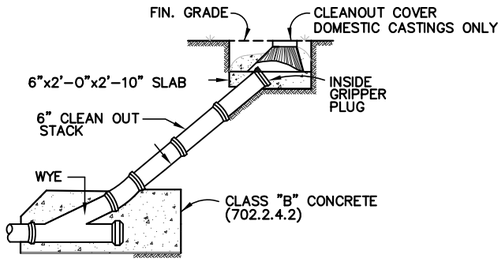

CLEAN – OUT

N.T.S.

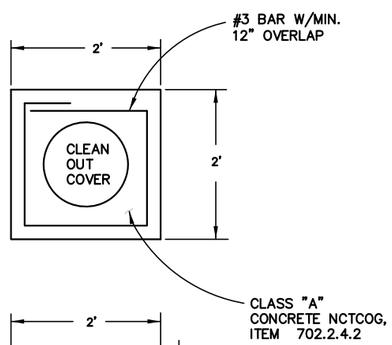

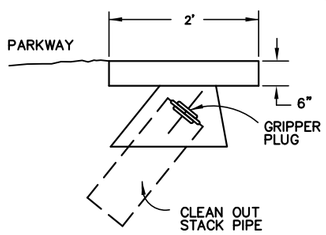

CLEANOUT COVER PAD DETAIL

N.T.S.

NOTE:

THIS DETAIL FOR CLEAN OUTS NOT IN PAVEMENT.

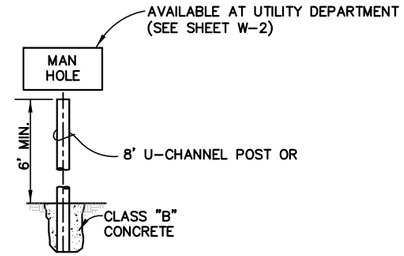

MANHOLE MARKER

N.T.S.

GENERAL NOTES:

1. ALL CONSTRUCTION MATERIALS, METHODS AND PLACEMENT NOT DETAILED BELOW SHALL MEET OR EXCEED THE STANDARD SPECIFICATIONS OF THE NORTH CENTRAL TEXAS COUNCIL OF GOVERNMENTS, OCTOBER 2004 EDITION UNLESS SUPERSEDED BY CITY OF MANSFIELD STANDARD SPECIFICATIONS OR MATERIAL TESTING POLICIES.
2. RING AND COVER SHALL BE DOMESTIC CASTING ONLY. (BASS & HAYS VRM 30 WITH CITY LOGO). CAST IN PLACE MANHOLE OR WEIGHTED DESIGNED CONE WITH BOLT DOWN RING AND COVER TO BE USED IN FLOOD-PRONE AREA AND MUST BE ANCHORED INTO CONE.
3. MANHOLE MARKERS SHALL BE INSTALLED IN ALL UNDEVELOPED AREAS.
4. MANHOLES IN DEVELOPED AREAS THAT ARE NOT IN PAVEMENT SHALL HAVE A 4'x4'x6" CONCRETE PAD.
5. MANHOLES SHALL BE PLACED MONOLITHICALLY WITH STREET. IF A BLOCK OUT IS NEEDED INSPECTOR WILL PRE-APPROVE SIZE & SHAPE OF BLOCK OUT.
6. INVERTS FOR CAST-IN-PLACE MANHOLES SHALL BE MADE BY PLACING PIPE CONTINUOUSLY THROUGH MANHOLES AND CUTTING OUT THE TOP OF THE PIPE. A MINIMAL AMOUNT OF CONCRETE INVERT BETWEEN PIPE ENDS WILL BE PERMITTED.
7. CONCRETE FOR MANHOLES TO BE CLASS "F" (6.5 SACK, 4200 PSI) PER NCTCOG SPECIFICATIONS 702.2.4.2. ALL CONCRETE SHALL CONTAIN SUFFICIENT AIR ENTRAINING AGENT TO YIELD 5% AIR CONTENT.

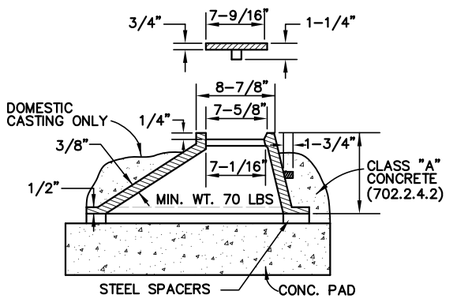

CLEANOUT COVER

N.T.S.

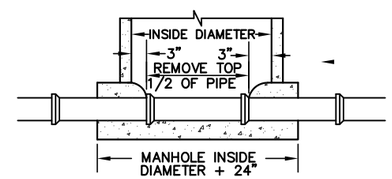

SECTION "A – A"

N.T.S.

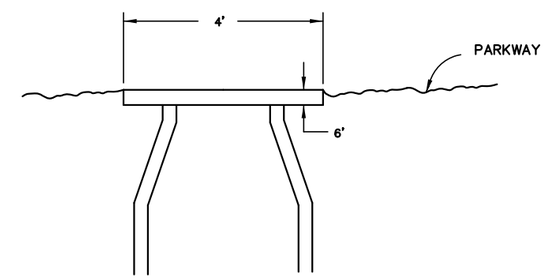

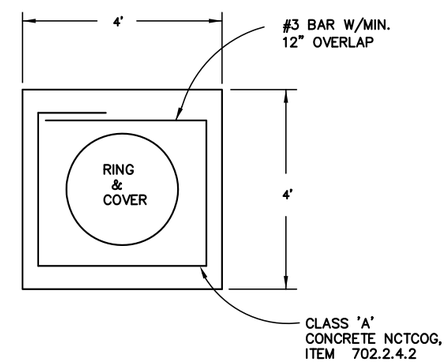

MANHOLE PAD DETAIL

N.T.S.

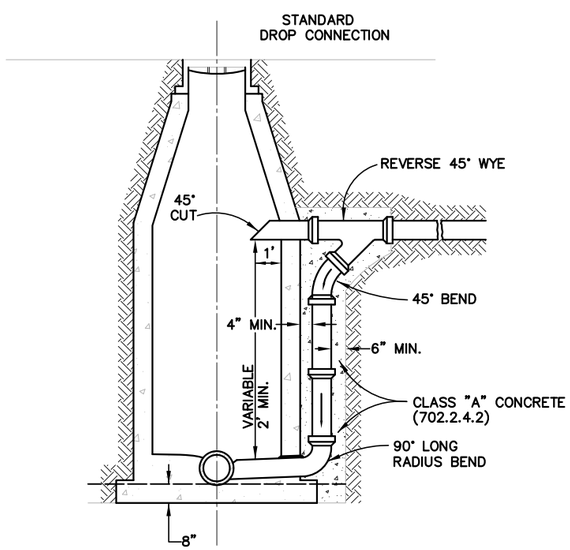

DROP CONNECTIONS FOR SANITARY SEWER MANHOLE

N.T.S.

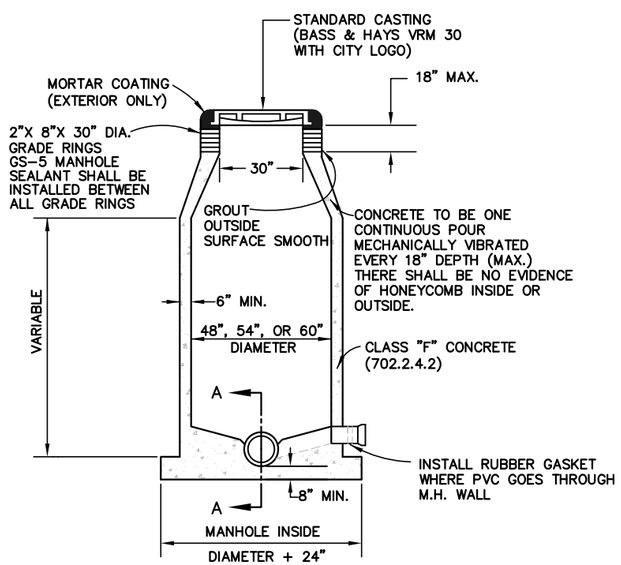

CAST IN PLACE MANHOLE

N.T.S.

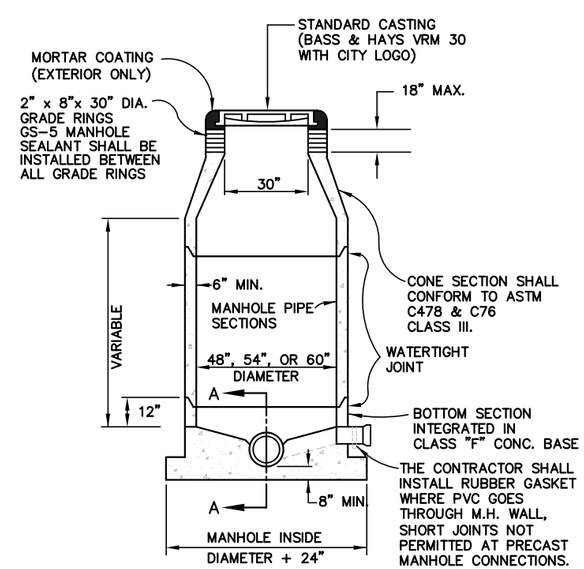

PRECAST CONCRETE MANHOLE

N.T.S.

MANHOLE & CLEANOUT DETAILS		
CITY OF MANSFIELD STANDARD CONSTRUCTION DETAILS		
SANITARY SEWER	DATE: NOV. 2014	SHEET NO. SS-1

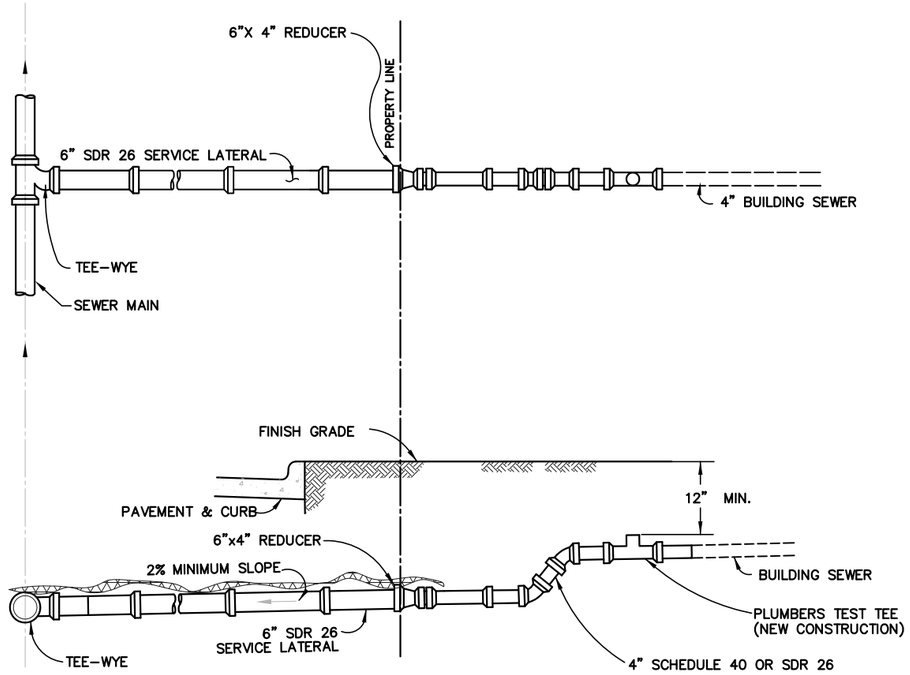

NOTES:

1. RUBBER BOOTS WILL ONLY BE PERMITTED FOR CLAY OR CONCRETE TILE SERVICE PIPE AND MUST BE CONCRETE ENCASED.

STANDARD SEWER SERVICE CONNECTION

N.T.S. (PLUMBER CONNECTION OR CIP RECONSTRUCTION)

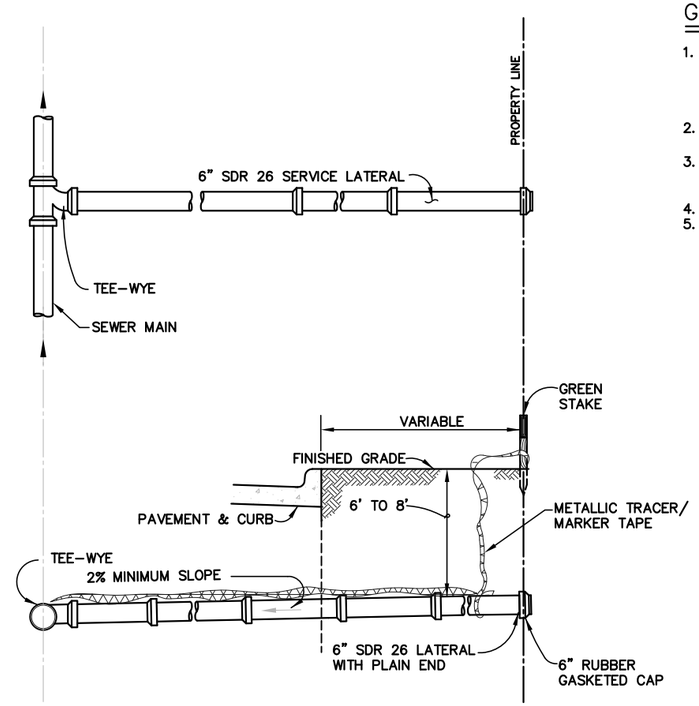

STANDARD SEWER SERVICE FOR NEW CONSTRUCTION

N.T.S.

GENERAL NOTES:

1. ALL CONSTRUCTION MATERIALS, METHODS AND PLACEMENT NOT DETAILED BELOW SHALL MEET OR EXCEED THE STANDARD SPECIFICATIONS OF THE NORTH CENTRAL TEXAS COUNCIL OF GOVERNMENTS, OCTOBER 2004 EDITION UNLESS SUPERSEDED BY CITY OF MANSFIELD STANDARD SPECIFICATIONS OR MATERIAL TESTING POLICIES.
2. WHERE COVER IS LESS THAN 3.5 FEET, SANITARY SEWER MAINS AND LATERALS SHALL BE CONCRETE ENCASED OR CAPPED (SEE SHEET M-1).
3. METALLIC TRACER/MARKER TAPE, GREEN IN COLOR AND MARKED "SANITARY SEWER", TO BE PLACED ALONG MAIN LINES & SERVICES ON TOP OF CRUSHED STONE EMBEDMENT.
4. SEE SHEET W-1 FOR SERVICE LOCATION.
5. SEE SHEET MS-2 FOR APPROVED MATERIAL LIST.

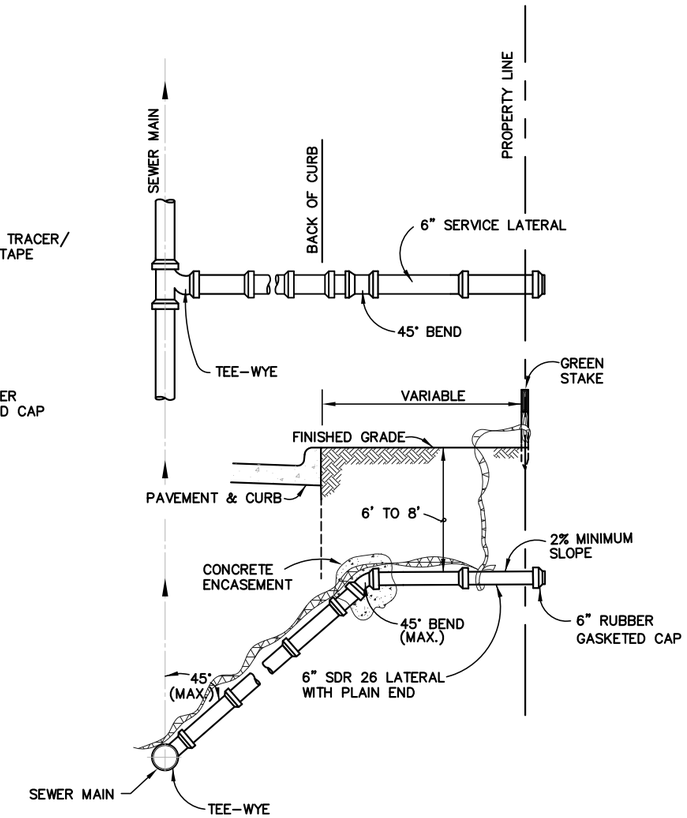

STANDARD DEEP SERVICE DETAIL FOR NEW CONSTRUCTION

N.T.S.

NOTES:

1. ROTATE TEE-WYE TO 45° MAX.
2. ONLY ONE 45° BEND WILL BE USED, 45° BEND MUST BE PLACED OUTSIDE OF PAVEMENT WHERE POSSIBLE.
3. CONCRETE ENCASE 45° BEND.

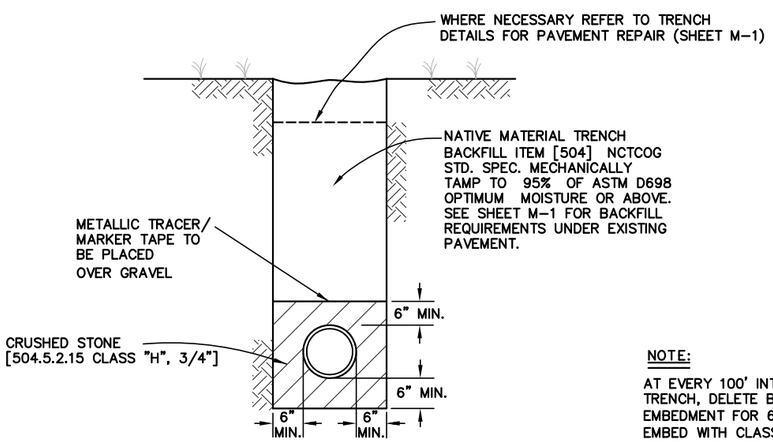

NOTE:

AT EVERY 100' INTERVAL ALONG TRENCH, DELETE BEDDING AND EMBEDMENT FOR 6' ALONG TRENCH. EMBED WITH CLASS "B" CONCRETE OR FLOWABLE FILL TO DISCOURAGE WATER MOVEMENT DOWN TRENCH.

SANITARY SEWER TYPICAL EMBEDMENT

N.T.S.

SERVICE & TRENCH DETAILS		
CITY OF MANSFIELD STANDARD CONSTRUCTION DETAILS		
SANITARY SEWER	DATE: NOV. 2014	SHEET NO. SS-2

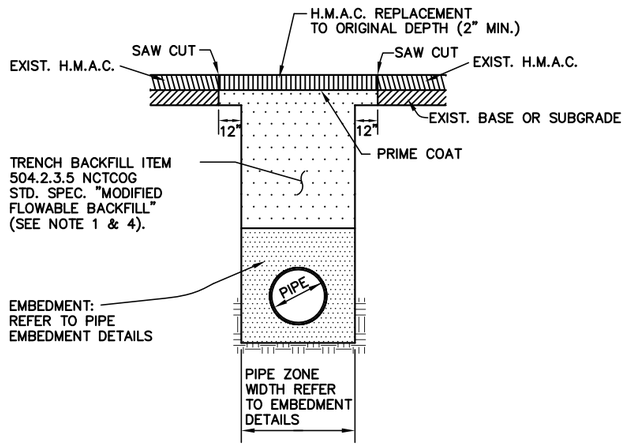

TYPICAL SECTION
ASPHALT PAVEMENT REPAIR

N.T.S.

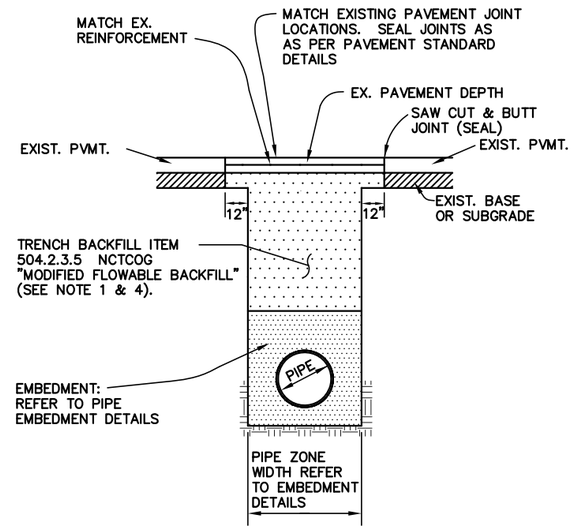

TYPICAL SECTION
CONCRETE PAVEMENT REPAIR

N.T.S.

GENERAL NOTES:

1. BACKFILL FOR OPEN CUTS IN EXISTING IMPROVED PAVED ROADWAYS SHALL BE MODIFIED FLOWABLE BACKFILL PER NCTCOG SPEC 504.2.3.5. NATIVE MATERIAL MAY BE PERMITTED IN LOWER PORTION OF DEEP TRENCHES AT INSPECTOR'S DISCRETION.
2. CONCRETE PAVEMENT REPLACEMENT SHALL BE IN A MINIMUM OF ONE HALF PANEL INCREMENTS.
3. REFER TO CITY OF MANSFIELD MATERIAL TESTING POLICIES FOR BACKFILL TESTING PROCEDURES.
4. TRENCH SAFETY: THE CONTRACTOR SHALL PROVIDE A TRENCH SAFETY PLAN WHICH SPECIFICALLY ADDRESSES AND IDENTIFIES THE TRENCHES TO BE MADE ON THIS PROJECT AND PROVIDES THE TRENCHING DETAILS TO PROVIDE A SAFE WORK PLACE IN ACCORDANCE WITH STATE LAW AND OSHA REGULATIONS. THE TRENCH SAFETY PLAN SHALL BEAR THE SEAL AND SIGNATURE OF A REGISTERED PROFESSIONAL ENGINEER LICENSED IN THE STATE OF TEXAS WITH EXPERIENCE IN PREPARATION OF TRENCH SAFETY SYSTEMS. THE PLAN SHALL INCLUDE ALL SOILS INVESTIGATION AND TEST DATA USED BY THE ENGINEER IN DEVELOPING THIS PLAN. THE CONTRACTOR SHALL CONDUCT HIS TRENCHING OPERATIONS IN ACCORDANCE WITH THIS PLAN. THE CONTRACTOR SHALL BE RESPONSIBLE FOR DAILY INSPECTION AND ENFORCEMENT OF SUCH PLAN.

TRENCH REPAIR AT PAVEMENT DETAILS

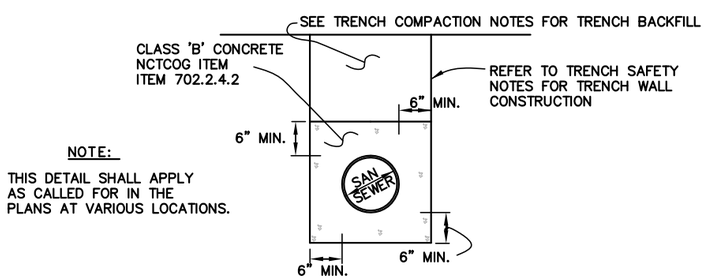

NOTE:

THIS DETAIL SHALL APPLY AS CALLED FOR IN THE PLANS AT VARIOUS LOCATIONS.

CONCRETE ENCASEMENT

N.T.S.

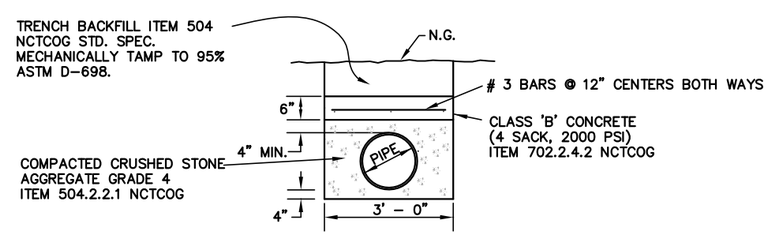

PIPE CONCRETE CAP DETAIL

N.T.S.

TRENCH DETAILS		
CITY OF MANSFIELD STANDARD CONSTRUCTION DETAILS		
MISCELLANEOUS	DATE: NOV. 2014	SHEET NO. M-1

ITEM	MATERIAL	SPECIFICATION	MIN. PRESS. CLASS	SIZE RANGE	MANUFACTURER/ MODEL	NOTES
				WATER		
Water Pipe	PVC	AWWA C-900	DR-18	4" - 12"		
	PVC	AWWA C-905	DR-18	14" - 48"		
	PVC (MO)	AWWA C-909	150 PSI	6" - 12"		Use D.I. O.D.
	Ductile Iron	AWWA C-150/151	250 PSI	16" - 36"		Pressure Class to be project specific
Service Saddles	Ductile Iron Body, Stainless Straps			1"	Smith Blair 315	Epoxy Coated (AWWA C-550), Stainless Straps
					Romac 101N	Flat Gasket - No O-rings, Controlled OD
					Ford FS 101	
					JCM 405	
				2"	Smith Blair 317	Double Strap
					Romac 202N	
					Ford 202 BS	
					JCM 406	
Gate Valves	Cast Iron	AWWA C-509		4" - 12"	M&H/Kennedy/Clow	Non Rising Stem (NRS), Epoxy Coated (AWWA C-550)
					Mueller 2360	Open counter-clock-wise.
					American Flow Control 2500	All hardware must be 304 stainless steel
					EJ FlowMaster	
	Ductile Iron	AWWA C-515		4" - 12"	M&H/Kennedy/Clow	Non Rising Stem (NRS), Epoxy Coated (AWWA C-550)
					Mueller 2361	Open counter-clock-wise
					American Flow Control 2500	All hardware must be 304 stainless steel
					EJ FlowMaster	
Butterfly Valves		AWWA C-504	Project Specific	16" +	M&H/Kennedy/Clow	Sealed, Gasketed & Lubed for Direct Bury Service
					Pratt	Min. 450 ft-lb Overload Torque; Open counter-clock-wise
					Mueller Lineseal	Epoxy Coated Inside & Out (AWWA C-550)
						All hardware must be 304 stainless steel
Tapping Sleeves	Stainless Steel Body, Steel Flange				Smith Blair 662, 664	Full Circle flat gasket - No O-ring
					Powerseal 3490	Size on Size not permitted on AC Pipe
					JCM 432	All hardware must be 304 stainless steel
					Mueller H-304	
	Ductile Iron				Mueller H-615	
Hydrants	Cast & Ductile Iron	AWWA C-502		5-1/4"	Waterous Pacer	Pent Nut, 4-1/2" Pumper Nozzle, Open Counter-clock-wise
					Clow Medallion	
					EJ WaterMaster 5CD250	
Hydrant Paint	Aluminum				Hydrant Hyde, Flynt, Tnemec	Color: Aluminum
Meter Box	Plastic			3/4" & 1"	NDS 1200-OLSB	In Grass
	Plastic			3/4" & 1"	DFW Plastics/Alliance 1200 OLSB	In Grass
	Plastic Box w/ Cast Iron Lid			3/4" & 1"	EJIW BCF 1118-12	In Sidewalk – 1-piece lid
	Plastic Box w/ Cast Iron Lid			1-1/2" & 2"	EJIW BCF 1527-12	All Locations – 1-piece lid
Retainer Glands	Ductile Iron				EBAA Iron Megalug	EBAA uses special gasket
					Romac Roma Grip	
					Sigma One Lock	
					Star Grip	
Corp. Stops	Brass			1"	Ford F1000-4G Comp.	Male CC Thread x 3 Piece Comp.
	(Lead Free)			1"	Mueller G-15008N	
				1"	AY McDonald 74701G	
				2"	Ford FB 1000-7G	
				2"	Mueller G-15013N	
				2"	AY McDonald 74701G	
Angle Curb Stops	Brass			1" x 3/4"	Ford KV43-342WG	3 Piece Comp. x Meter Swivel Nut
	(Lead Free)			1" x 3/4"	Mueller G-14258N	
				1" x 3/4"	AY McDonald 74602G	
				1"	Ford KV43-444WG	
				1"	Mueller G-14258N	
				1"	AY McDonald 74602G	
				2"	Ford FV43-777WG -or- BFA43-777WG	3 Piece Comp. x Meter Flange (Ground Key -or- Ball Valve)
				2"	Mueller G-14277N -or- G-24276N	
				2"	AY McDonald BCSG	
Pipe Fittings	Cast Iron	AWWA C-110		16" +		Domestic & Foreign
	Ductile Iron	AWWA C-153		4" - 36"		Domestic & Foreign
Misc. Castings	Cast Iron			24" - 36" / 36" - 48"	Tyler 6850 Series	Valve Boxes - 2 Piece Screw Type (Domestic Only)
					EJ 8550 Series	

MATERIAL SPECIFICATIONS

CITY OF MANSFIELD

STANDARD CONSTRUCTION DETAILS

MATERIALS	DATE: NOV. 2014	SHEET NO. MS–1

ITEM	MATERIAL	SPECIFICATION	MIN. PRESS. CLASS	SIZE RANGE	MANUFACTURER/ MODEL	NOTES
				SANITARY SEWER		
Sewer Pipe	PVC	ASTM D-3034	SDR-26	6" - 15"		
	PVC	ASTM F-679		18" +		
	PVC Open Profile	ASTM F-794		15" +		
	PVC Dual Wall Corrugated Profile	ASTM F 794, F 949		15" +		
Force Main Sewer Pipe	White PVC	AWWA C-900	DR-18	4" - 12"		
	White PVC	AWWA C-905	DR-18	14" - 48"		
Sewer Fittings	PVC	ASTM D-3034	SDR-35	6" - 24"	Plastic Trends - G-series	SDR-26 for Deep Cover (Greater than 20', Project Specific)
					Multi-Fitting - Trench Tough Plus	
End of Line Clean-out	Cast Iron				Bass & Hayes 339	
Service Clean-out Caps	Plastic (In Grass), Cast Iron (In Concrete)			4"	NDS 404; EJIW 404	
SS MH Ring & Cover	Cast Iron				Bass & Hayes VRM30	Domestic Only (with city logo)
					Bass & Hayes VRM30WT	Water-Tight Applications (with city logo)
				MISCELLANEOUS		
Casing Spacers	Plastic			6" - 12"	Raci F/G	
	Plastic			14" - 20"	Raci M/N	
	Plastic			24" - 30"	Raci E/H	
	Plastic or Stainless Steel			6" - 12"	PSI Ranger Midi or Model SG	
	Plastic or Stainless Steel			14" - 30"	PSI Ranger Maxi or Model SG	
				STORM SEWER		
Storm Drain Pipe	Reinforced Concrete		Class III	18" +		All Public Installations
Inlet Ring & Cover	Cast Iron				Bass & Hayes #226	Domestic Only
Storm MH Ring & Cover	Cast Iron				Bass & Hayes VRM30	Domestic Only (with "Bass" design)

MATERIAL SPECIFICATIONS

CITY OF MANSFIELD

STANDARD CONSTRUCTION DETAILS

MATERIALS	DATE: NOV. 2014	SHEET NO. MS-2